The Society for engineering in agricultural, food, and biological systems

Paper Number: 01-1190
An ASAE Meeting Presentation

DGPS-Based Guidance of High-Speed Application Equipment

Timothy S. Stombaugh, Assistant Professor

Biosystems and Agricultural Engineering, University of Kentucky (tstomb@bae.uky.edu)

Scott A. Shearer, Associate Professor

Biosystems and Agricultural Engineering, University of Kentucky

Written for presentation at the
2001 ASAE Annual International Meeting
Sponsored by ASAE
Sacramento Convention Center
Sacramento, California, USA
July 30-August 1, 2001

Abstract. *Contemporary automatic guidance research and development has largely utilized highly accurate but expensive real-time kinematic GPS systems for position determination. In this paper, an approach for guiding a vehicle using a lower-cost Differential Global Positioning System (DGPS) receiver is highlighted. The system was successfully implemented on a high-clearance field sprayer at speeds up to 6.7 m/s (15 mph), and was found to have good convergence and tracking ability.*

Keywords. Automatic Guidance, Precision Agriculture, DGPS, Electrohydraulics, Sprayer

The authors are solely responsible for the content of this technical presentation. The technical presentation does not necessarily reflect the official position of the American Society of Agricultural Engineers (ASAE), and its printing and distribution does not constitute an endorsement of views which may be expressed. Technical presentations are not subject to the formal peer review process by ASAE editorial committees; therefore, they are not to be presented as refereed publications. Citation of this work should state that it is from an ASAE meeting paper. EXAMPLE: Author's Last Name, Initials. 2001. Title of Presentation. ASAE Meeting Paper No. xx-xxxx. St. Joseph, Mich.: ASAE. For information about securing permission to reprint or reproduce a technical presentation, please contact ASAE at hq@asae.org or 616-429-0300 (2950 Niles Road, St. Joseph, MI 49085-9659 USA).

Introduction and Background

With the development of larger and faster field application equipment, the operator's task of guiding the vehicle along precisely parallel paths or swaths has become increasingly more difficult. Nieminen and Sampo (1993) showed that operators tend to overlap subsequent passes to prevent the more noticeable effects of skips in coverage. Their data suggest that the overlaps will approach 10% of the swath width, depending on the size of the machine. It is desirable to minimize this overlap to reduce excessive input application.

Several modern guidance aids have been developed to assist machine operators in steering along parallel paths. Burks et al. (2000) compared the guidance accuracy of one machine operator using no guidance aid, a foam marker system, and a DGPS-based lightbar. They found that the standard deviation of guidance errors was least when the operator utilized a DGPS-based lightbar.

Even though lightbars or other guidance aids can help improve swath accuracy, Matsuo et al. (1998) showed that automating the vehicle steering system could improve guidance accuracy beyond what is achievable by human operators. Much research has focused on the development of automated guidance systems for agricultural vehicles, resulting in several commercially available guidance systems for agricultural tractors. Most of these systems utilize Real Time Kinematic (RTK) GPS receivers, which can provide position accuracy well within 10 cm. Consequently, these guidance systems are quite expensive and difficult to use since the user must set up a base station within a relatively close proximity to the field operation. Another limitation of these systems is that vehicle forward speed is somewhat limited.

The currently available guidance systems have not been extensively applied to larger field application equipment such as high-clearance field sprayers. These machines are often operated at field speeds in excess of 25 km/hr (15 mph), which is above the capabilities of the commercial guidance systems. In addition, this machinery does not require the accuracy achieved by RTK GPS receivers. Since application widths of many of the modern machines can be as large as 30 to 40 m, a guidance accuracy target of only 1 m would result in application errors of 3% or less. Many operators are already utilizing Differential GPS (DGPS) technology on the machines to drive lightbar guidance aids and/or to control variable rate application of the inputs. In general, DGPS receivers can provide 1 m position accuracy and could be utilized for automating the steering.

Preliminary studies (Ramalingam et al., 2000; Stombaugh and Shearer, 2001) indicated that DGPS technology could be used to guide an agricultural tractor. These tests showed very good convergence ability and reasonable tracking ability at forward speeds up to 4.4 m/s (10 mph). Zhou et al. (2000) successfully applied a vision-based guidance system to a high-clearance field sprayer, though they were limited to relatively slow speeds. Other studies have indicated that high-speed guidance of farm vehicles could be achieved using RTK GPS equipment (Stombaugh et al., 1999).

Objectives

The goal of this project was to evaluate the applicability of DGPS technology for automated guidance of high-speed field application equipment. This goal was accomplished by 1) developing an automated guidance system on a high clearance field sprayer, and 2) evaluating the system with respect to accuracy, convergence, and stability.

Materials and Methods

The guidance system developed in this project was the result of a partnership between the University of Kentucky researchers and Satloc, Inc. (Fig. 1). The vehicle that was used as a test bed for this project was a Spra-Coupe model 4640[1] high clearance field sprayer (Fig. 2). The hydraulic system of the sprayer consists of an open-centered, "power beyond" steering valve (Fig. 3, Valve A – represented as an open-centered valve for simplicity) upstream of closed-centered electrohydraulic valve banks for other machine functions. Solenoid valve B (Fig. 3) is activated each time one of the downstream valves are activated to force flow to the valves. A closed-centered solenoid-operated directional control valve or DCV (Fig. 3, Valve C) was plumbed downstream of the manual steering valve. In this configuration, solenoid valve B had to be activated any time the steering valve was activated. A throttling valve (Fig. 3, Valve D) was used to limit the flowrate of fluid through the DCV. Two solenoid valves (Fig. 3, Valves E and F) were used to isolate the outputs of the manual steering valves from the automatic valve during automated steering to avoid fluid feedback through the steering wheel.

Satloc, Inc. provided a model SLX DGPS receiver and light bar for this research (Fig. 1). The absolute RMS-level position accuracy of this DGPS receiver is 1 m; however, the relative accuracy of the receiver over the short duration of the response tests was much better than 1 m. The light bar computer was specially equipped with a Digital-to-Analog Converter (DAC). A proprietary algorithm developed by Satloc, Inc. provided an analog signal through the DAC that was proportional to a predicted steering wheel angle. The algorithm considered the heading and offset of the vehicle relative to the desired path. The GPS antenna and lightbar were mounted on a bracket at the very front of the hood of the machine.

The Pentium-based guidance computer (Fig. 1) read the analog steering signal through a data acquisition card (DAQ). The guidance program, which was developed at the University of Kentucky using Visual BASIC®, calculated the appropriate steering command from the steering signal. The command was passed through the DAQ to a pair of relays, which controlled the steering valve coils (Fig. 3, Valve C).

[1] Mention of trade name, proprietary product, or specific equipment does not constitute a guarantee or warranty by the University of Kentucky and does not imply the approval of the named product to the exclusion other products that may be suitable.

One of the unique aspects of this guidance system was the simple on-off steering valve. Most automatic guidance systems, including those previously developed by the authors (Stombaugh et al., 1999), utilized proportional hydraulic valves. These valves are expensive, and performance often drifts with time and temperature. The solenoid valves used in this project are much less expensive and troublesome than proportional valves.

The solenoid steering valve necessitated a unique steering control scheme. The innovative approach taken by the researchers utilized a hybrid of “bang-bang” and pulse-width modulation control. When a steering correction was initiated by the guidance computer, the electrohydraulic valve was turned fully on, held on for a period of time proportional to the steering command (typically less than 200 ms), then turned back off. The flow rate of oil to the steering valve was restricted to prevent over-steering and uncomfortable hydraulic “hammer.” A minimum pulse width was determined from the minimum response time of the solenoid steering valve.

The automatic steering valve coils were driven by solid-state relays, which were controlled by the DAQ (Fig. 4). Because the control program was running from a Windows computer environment that habitually interrupts system operation, the pulse width was controlled with a counter/timer on the DAQ board to insure accurate pulse timing. A manual switch controlled 12 VDC power to the isolation valves and open-centered/closed-center switch valves (Fig. 3, Valves E, F, and B) to activate automatic steering components. For safety reasons, this switch should be a “dead man” switch requiring the operator to hold the switch closed for automatic steering. Release of the switch will immediately return the machine to manual steering control.

Results and Discussion

Field tests of system performance were conducted on a sod surface on the campus of the University of Kentucky. A series of step response tests were used to evaluate the straight-line steering or steady state performance of the guidance system as well as the convergence or settling performance. The lightbar computer recorded vehicle crosstrack or offset error from the desired path. The offset error was based on the positions received from the Satloc model SLX DGPS receiver. The standard deviation of this offset error after settling was calculated to compare test results.

The guidance system was tested at typical speeds for field sprayer operation. Several tuning parameters were adjusted to achieve maximum convergence. The final configurations were tested at forward speeds of 4.4 and 6.7 m/s (Figs. 5 and 6), resulting in standard deviations of 0.60 and 0.79, respectively. These deviations were measured from the GPS antenna location at the front of the vehicle. Due to the kinematics of the vehicle, the lateral deviation of the rear-mounted boom was slightly less.

One critical tuning parameter of the guidance system was the feedback gain. The feedback gain had several noticeable effects on system performance (Fig. 7). If the gain was too low, the system would not converge to the desired path. If the gain was

too high, any noise in the system was amplified. This noise amplification was evident as the machine passed diagonally across a shallow swale causing it to roll slightly (Fig 7). The higher gain would elicit a noticeable response to this disturbance.

Another critical tuning parameter of the guidance system was the hydraulic flowrate as regulated by the throttling valve (Fig. 8). If the flowrate was too high, the system tended to oscillate about the desired path. If the flowrate was too low, the steering could not respond quickly enough to converge to the desired path.

There is an interaction between the feedback gain and hydraulic flowrate. A change in one parameter can compensate for a non-optimal setting in the other. The best overall performance is achieved when both parameters are tuned to their optimum value. In comparing results from these tests with previous studies involving an agricultural tractor (Stombaugh and Shearer, 2001), there appears to be a unique set of feedback and flowrate parameters for every machine geometry and hydraulic configuration.

There was a significant steady state error noticed in all of the tests. This error was caused by the nature of the output signal from the lightbar computer, its relationship with the feedback parameters, and noise present on the analog data link. Plans have been initiated with Satloc, Inc. to combine the two computer systems into one unit, thus eliminating the troublesome analog link and conflicting control parameters.

Conclusions

A DGPS-based automatic guidance system was successfully developed for automated steering control of a high-speed chemical application vehicle. The guidance system utilized a simple DGPS receiver as the only position feedback sensor, and a solenoid-operated directional control valve for steering control. The critical tuning parameters for the system were the feedback gain and hydraulic flowrate. The system was found to have good convergence and tracking ability; however, further refinements are necessary to eliminate steady state errors.

Acknowledgements

The authors would like to express appreciation to Satloc, Inc. for providing DGPS equipment and for developing part of the control algorithm and to Agco Corp. for the use of the test vehicle.

References

Burks, T. F., S. A. Shearer, and J. P. Fulton. 2000. Assessment of fertilizer application accuracy with the use of navigation aids. ASAE Paper No. 00-1154. St. Joseph, MI: ASAE.

Grovum, M. A. and G. C. Zoerb. 1970. An automatic guidance system for farm tractors. *Transactions of the ASAE* 13(5):565-573,576.

Matsuo, Y., D. Yukomoto, and N. Noguchi. 1998. Navigation systems and work performance of tillage robot. ASAE Paper No. 98-3192. St. Joseph, MI: ASAE.

Nieminen, T. and M. Sampo. 1993. Unmanned vehicles for agricultural and off-highway applications. SAE Technical Paper Series No. 932475. Warrendale, PA: SAE.

Ramalingam, N., T. S. Stombaugh, J. S. Mirgeaux. 2000. DGPS-based automatic vehicle guidance. ASAE Paper No. 00-1068. St. Joseph, MI :ASAE.

Stombaugh, T. S., E. R. Benson, J. W. Hummel. 1999. Guidance control of agricultural vehicles at high field speeds. *Transactions of the ASAE*. 42(2):537-544.

Stombaugh, T. S. and S. A. Shearer. 2001. DGPS-based automatic guidance of agricultural vehicles. Proc. of the Third European Conference on Precision Agriculture, June 18-20, Montpellier, France. Vol. 1:121-126.

Zhou, Y., L. Tian, and L. Tang. 2000. Aided guidance system based on machine vision and optical encoders for smart sprayers. ASAE Paper No. 00-1018. St. Joseph, MI:ASAE.

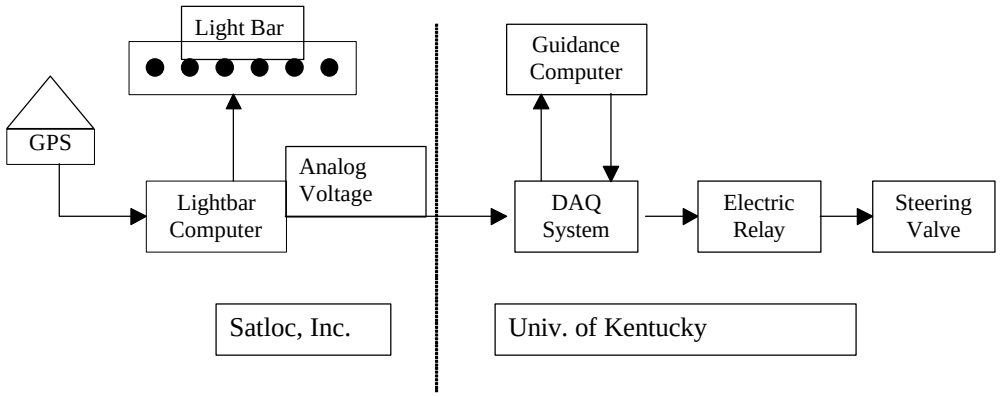

Figure 1. Guidance system components developed by the University of Kentucky and Satloc, Inc.

Figure 2. Vehicle used for automatic guidance tests

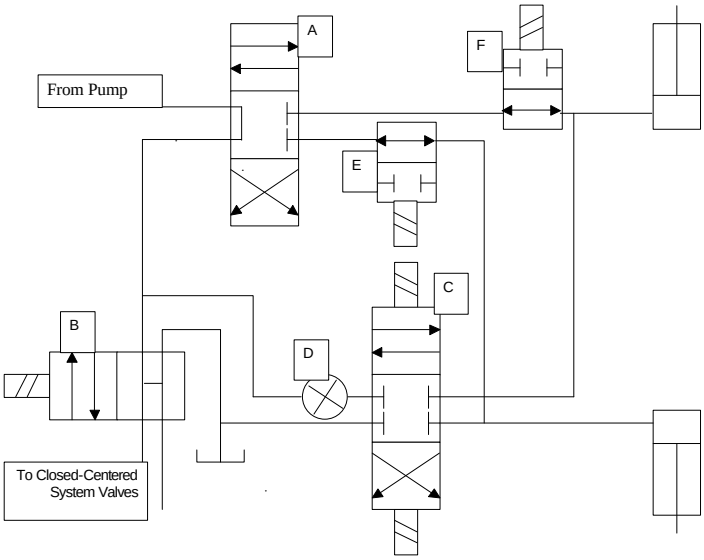

Figure 3. Hydraulic configuration of manual and automatic steering valves.

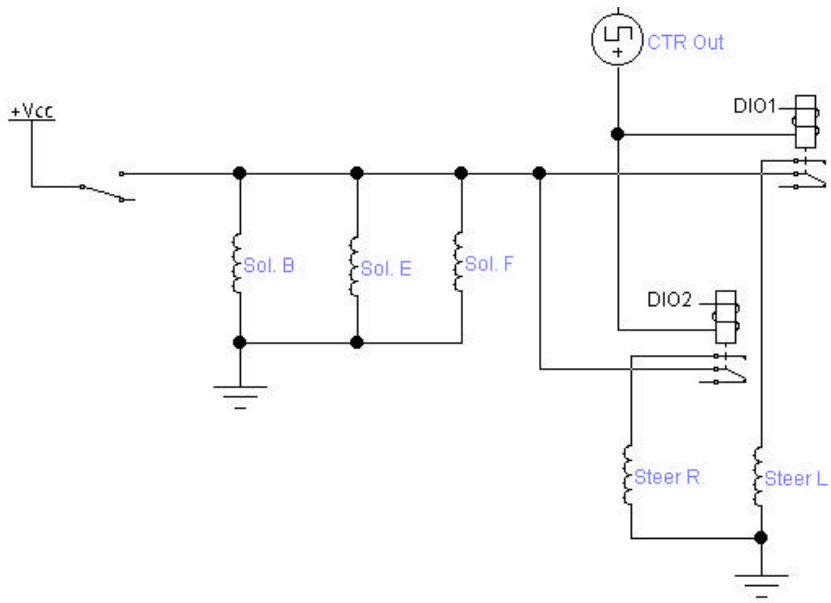

Figure 4. Circuit diagram for relays and solenoid coils.

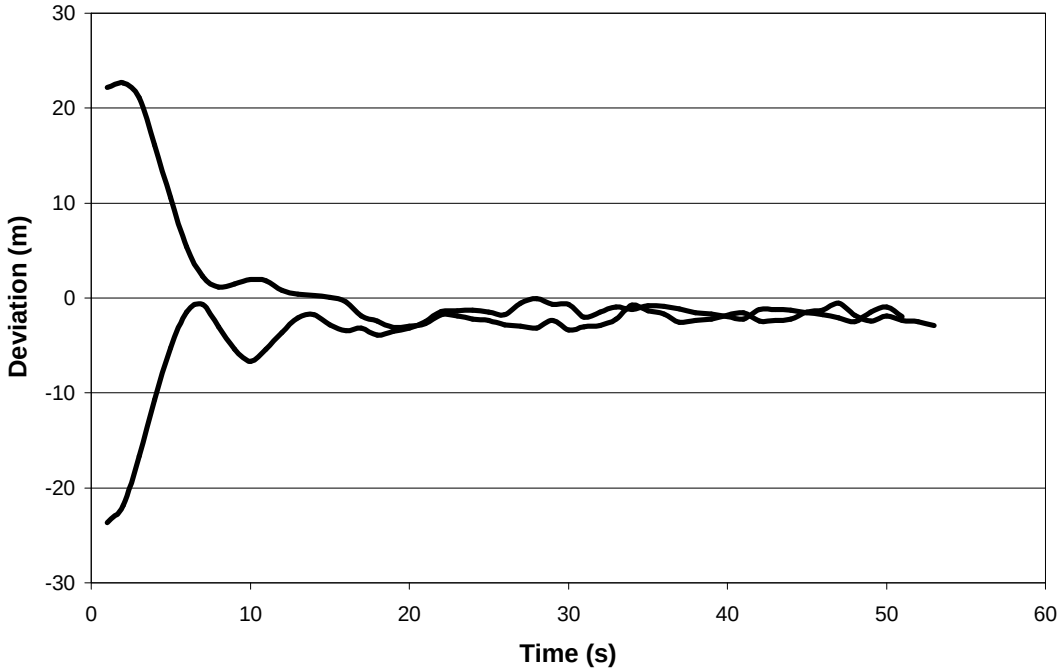

Figure 5. Step response of guidance system with vehicle forward speed of 4.4 m/s (10 mph).

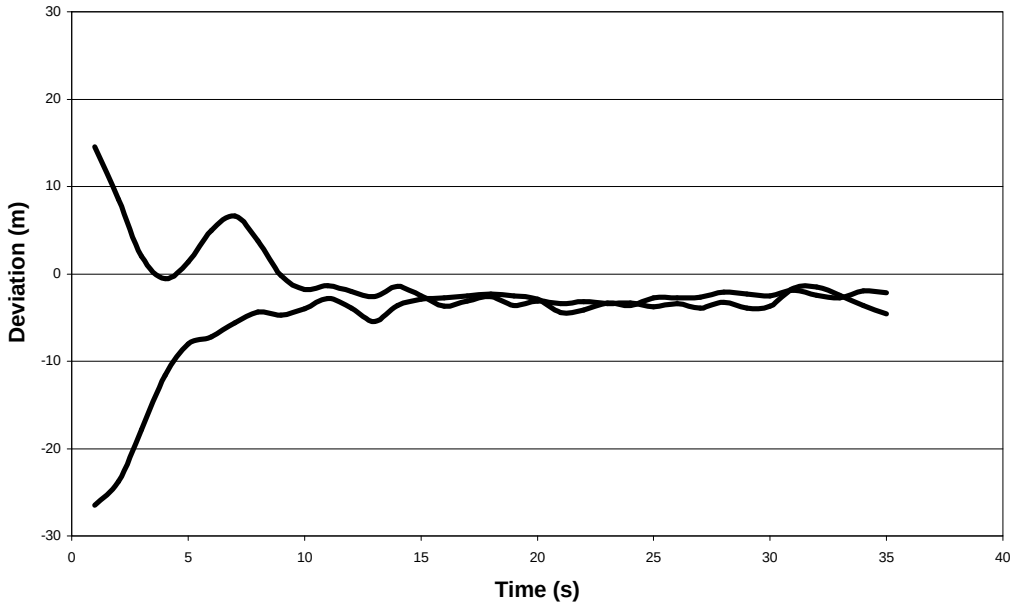

Figure 6. Step response of guidance system with vehicle forward speed of 6.7 m/s (15 mph).

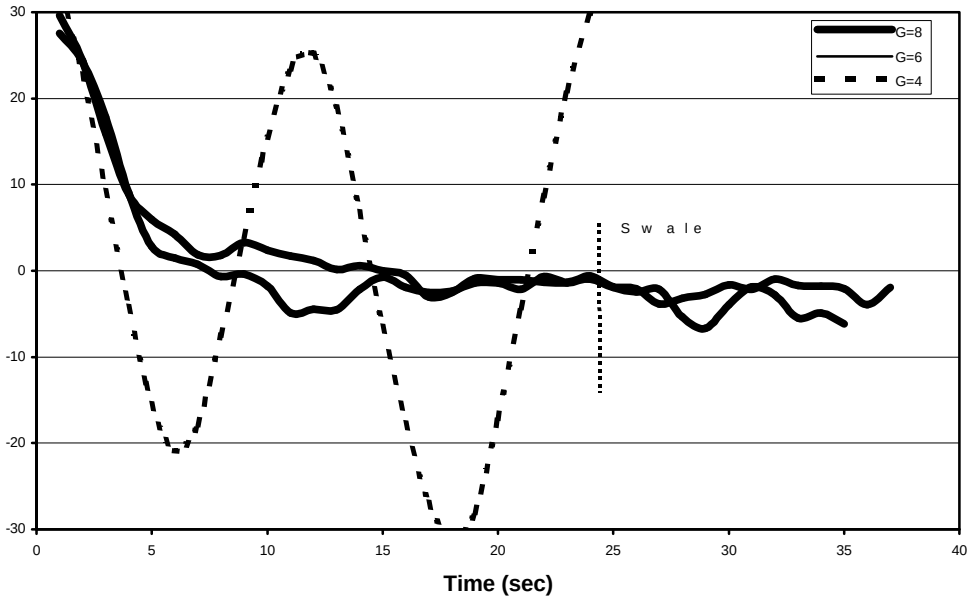

Figure 7. Guidance system performance at various feedback gains.

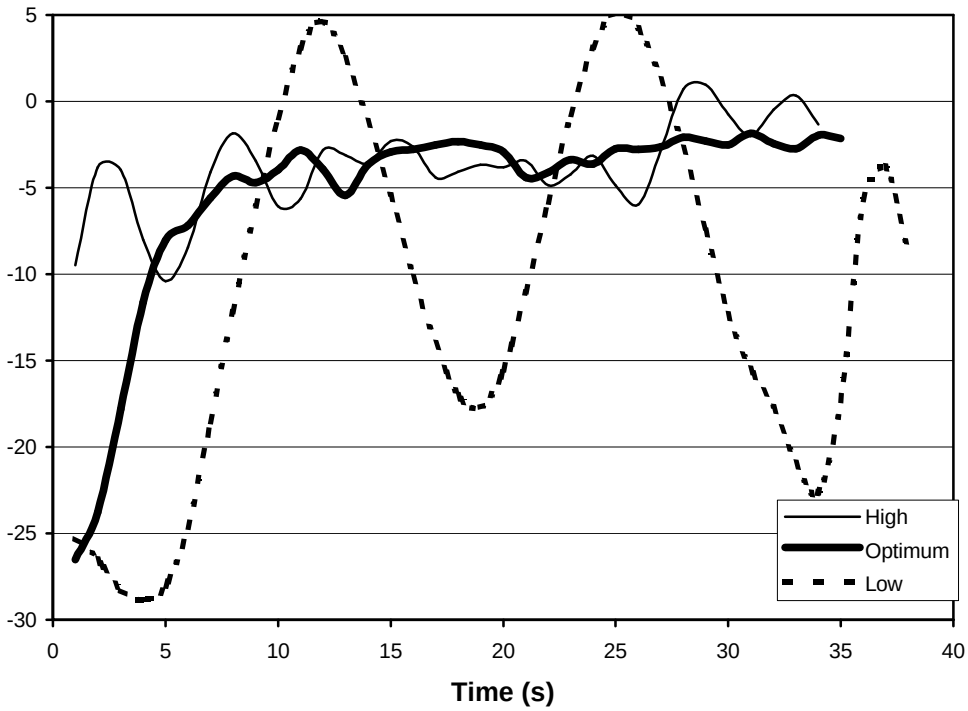

Figure 8. Guidance system performance at various hydraulic flowrates.