Voiry Florent

Summer 2003

ITA fi 2002-2005

# Agricultural training in United States of America

# Forage and GPS

English Advisor : S.A. Shearer

Department Biosystems and Agricultural Engineering

UK UNIVERSITY OF KENTUCKY College of Agriculture

Lexington, Kentucky

French advisor : J.P. Douzals

Department Science pour l'ingenieur

enesad

Dijon

## Summary

Agricultural training in United States of America ..... 1

Forage and GPS ..... 1

My project: Forage and GPS ..... 3

A The idea ..... 3

B Drawing ..... 4

C Building ..... 5

D Connecting the sensor to the data card ..... 5

E Make the programme in Visual Basic 6 ..... 6

E.a Objective ..... 6

E.b Data of the sensor ..... 6

E.c Data of the GPS ..... 7

E.d Diagram ..... 7

E.e Analysis of the data ..... 7

F Conclusion ..... 8

# My project: Forage and GPS

This project was given by Scott A Shearer for my training period during the summer 2003. To make this project I had a lot of means: I had computers with lots of software such as AutoCAD, Visual Basic 6, Arc GIS ... a workshop full equipped and a farm to do test. So I appreciate all the people who helped me realize my project.

When I started my training period, my advisor gave me the subject: Forage and GPS. After one week of discovery work at a UK farm, I presented three ideas for estimating yield of forage.

## *A The idea*

With this title I imagined three ideas to measure forage in the field. My estimator of forage aims to create a yield map and, after, analyze the field, identifying the best areas or bad areas for site-specific management zone delineation.

My first idea is the hay compression. I imagine making two different skates: a narrow one to give the soil position and a large one for give the density of the forages. And I think it is possible to adapt this idea to the mower's protector.

My second idea is to measure the torque of the shaft mower's conditioner. I have two ideas to measure this torque: first I want to use a torque meter in the shaft and second I want to use a hydraulic circuit with a pump, motor, and two pressure sensors.

My last idea is to measure the strength of the mower conditioner for grass. I want to put a strength sensor in the plate of the conditioner and for alfalfa I want to put strength sensor between the rolls or the iron sheet and the conditioner.

After thinking about it with my advisor, we (my advisor and I) decided to build the first project: the hay compression.

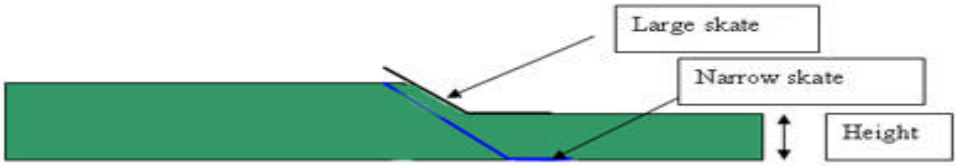


**Diagram 1. The hay compression**

## *B Drawing*

To build this project I reflected about different mechanisms for reliability and efficiency. After a few trys, I choose to put a narrow skate in the middle of the large skate; the best advantage is that it will be easier to mount the sensor. To design it, I used CAD software (AUTOCAD). I began to build at ninety degrees but discovered one at forty five degrees more precise.

The sensor I was given by my advisor, is a linear potentiometer sensor so I decided to build a narrow skate with an eccentric circle as the rotation pin. The narrow skate looks like a share: it is a big plate in iron. To evaluate the share position, I put a bolt at the top of a sensor to adjust the position and a bearing to read the position of the eccentric circle.

To carry all of these parts, I drew a "skeleton". It is very important to reinforce the large skate. This part is attached at the arm with a parallel system. With this mechanism the large skate is always parallel to the soil.

To respect the forage and to not have influence of the tires, I put the mechanism in the front of the tractor. I removed the weights and the carry weight to use the fixation. I fixed an articulated arm because I wanted to link up the mechanism for the transport or during turns.

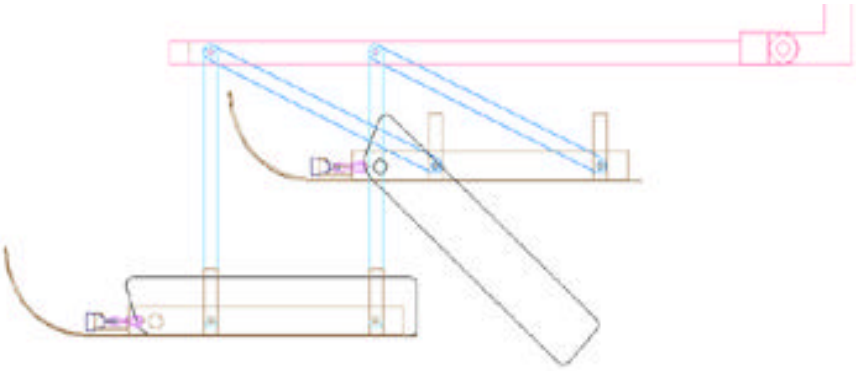

**Diagram 2. Plane of the hay compression**

## C Building

In the construction I reinforced the frame. I put in a guide arm to help center the skate in the middle when it is up. I put a spring on the chain to help when I lifted up the arm. I protected the front of the tractor by installing a large rod and I put a pulley to centre the twine. Finally, I made a little box to carry the computer, the data cart and the DC converter.

**Diagram 3. Tractor**

## D Connecting the sensor to the data card

The sensor data cart has a ground port a positive port and two ports by channel: the low and the high port. The most important is to connect the adjustable pin at the low port and connect at the high port at the positive port (5V). If you reverse the potentiometer, you just reverse the signal. So don't worry and change your interpretation on the GIS File.

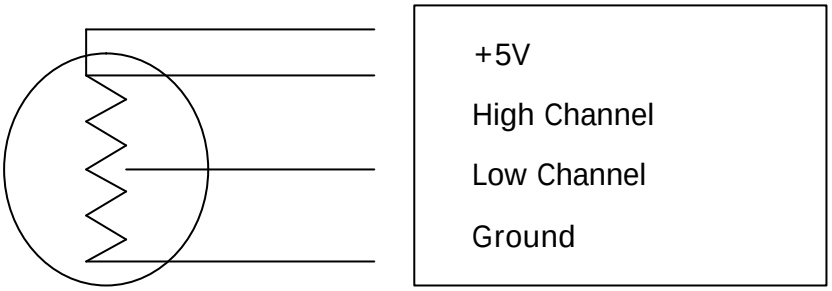


**Diagram 4. Sensor connection**

## *E Make the programme in Visual Basic 6*

### E.a Objective

The first objective is to collect data and fill in a file. This data file must contain the latitude, the longitude, the time and the sensor value.

The second objective is to have a reliable value of the sensor. So I chose to use a geometrics by mean to correct occasional bad values (for example: the jump of the share)

The third and the last objective is to have one reading each second. So the software must be very fast, so I decided to use the minimum components and I prefered the use of a line graph over a bar graph for historical value

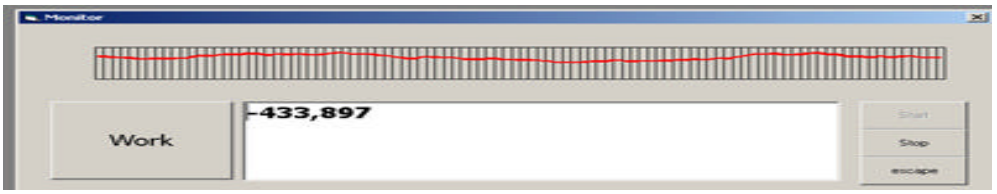


**Diagram 5. The software**

### E.b Data of the sensor

To input data from the sensor I inserted a specific module in Visual Basic. I have a new instruction to order the value of the sensor.

## E.c Data of the GPS

I connect the GPS at the serial port. After a few test with a Garmin I use a Trimble Electronic GPS I choose the $GPGLL sentence because it is one that gives information about direction latitude, longitude, and time. I grab my sentence and cut it to extract the data, transform the latitude and the longitude in decimal number. I inserted two timers: 1) for the sensor, every 100ms the sensor value is stored in data, and 2) to compute the geometric by means of the sensor and write the data file.

## E.d Diagram

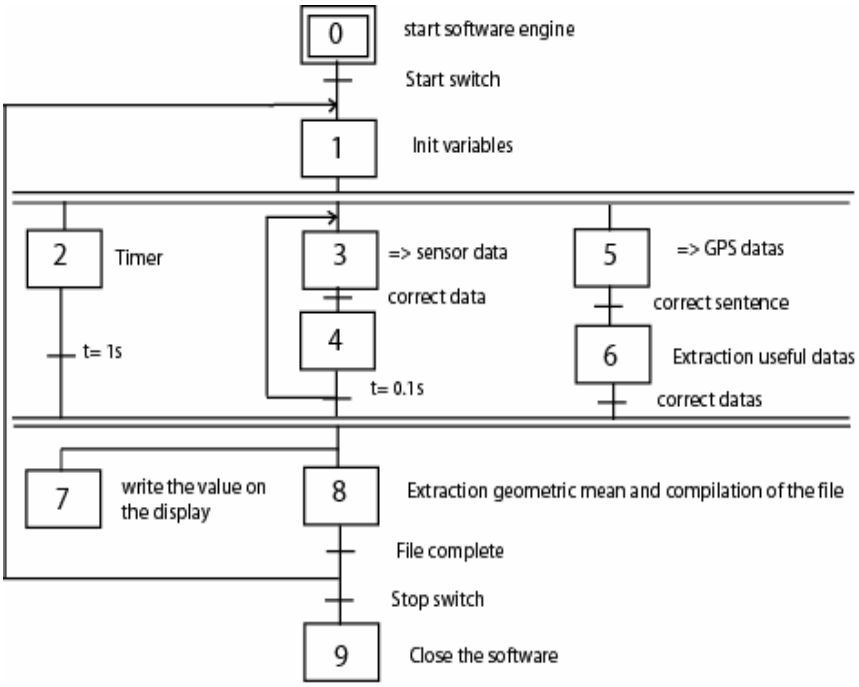


**Diagram 6. GRAFCET of the software**

## E.e Analyse of the data

The software does a TXT file. This file contains different fields:

- the time of the GPS
- the geographic data: Latitude Longitude
- the sensor means

With GIS software (for example ArcGIS) you import the data and afterwards make a map to situate each point. You can use a panel of colour to attribute a specific colour to each point for each data of sensor.

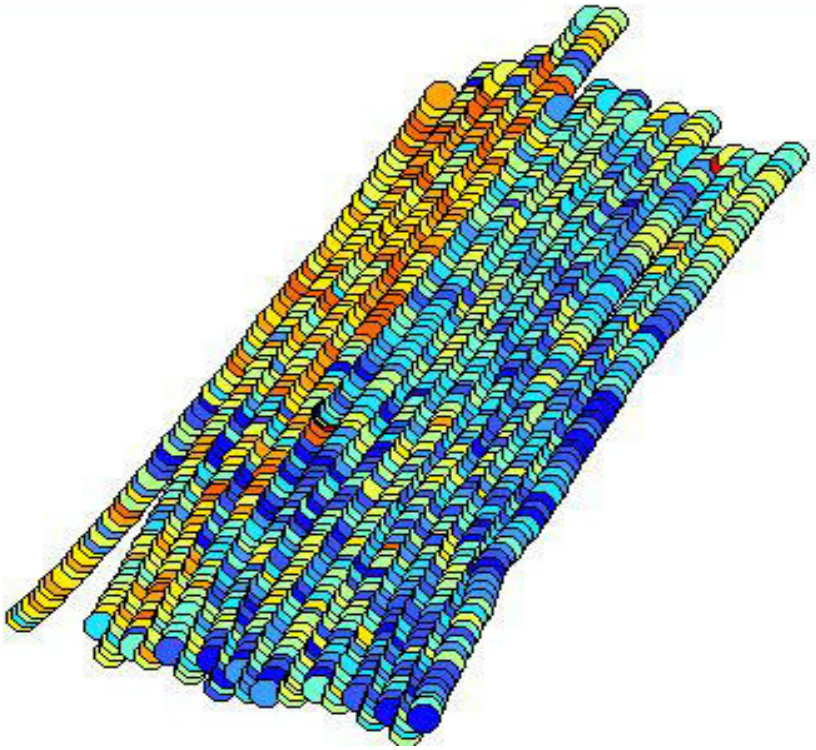

**Diagram 7. Yield map obtain in a field**

Hot colors represent high height so best yield

## *F Conclusion*

This training was a very good experience. I was able to do a project entirely. But if I had more time, I think I would remake the skate in aluminium because the one in iron is too heavy. And for the sensor point's analysis, I would do lots of test to include the speed. I think that the height of the sensor is influenced by the flow of grass, thus speed will be critical. Thanks a lot to everyone who helped me to do this project.