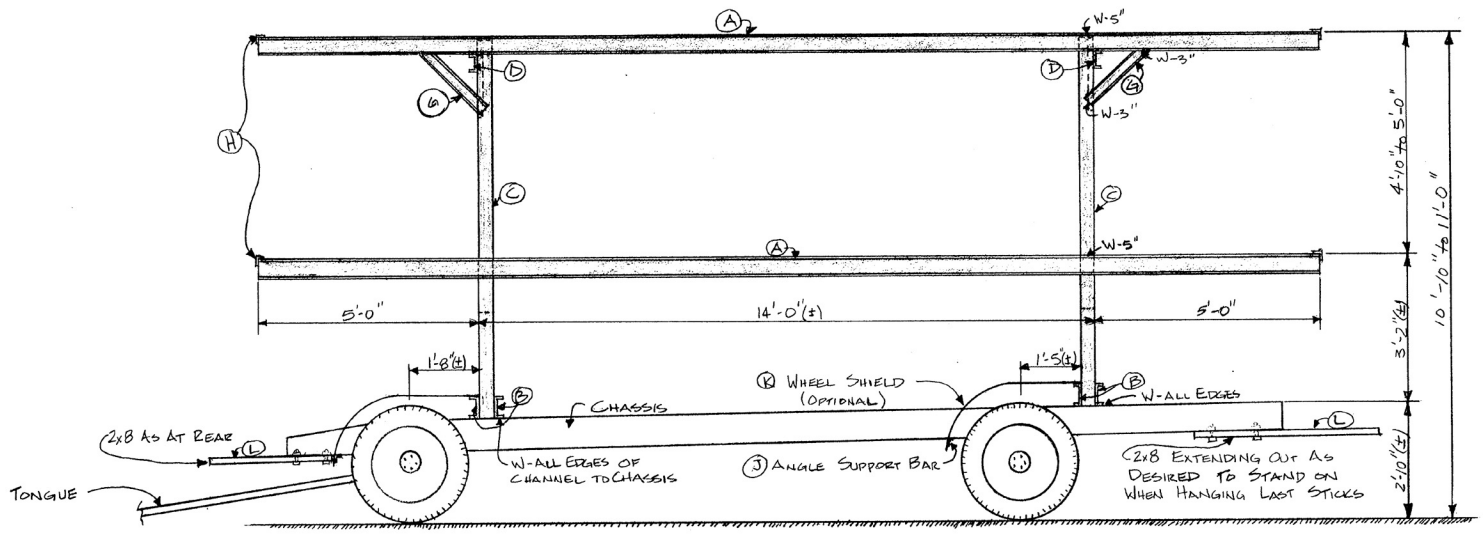

SIDE VIEW

SCALE: 3/8"=1'-0"

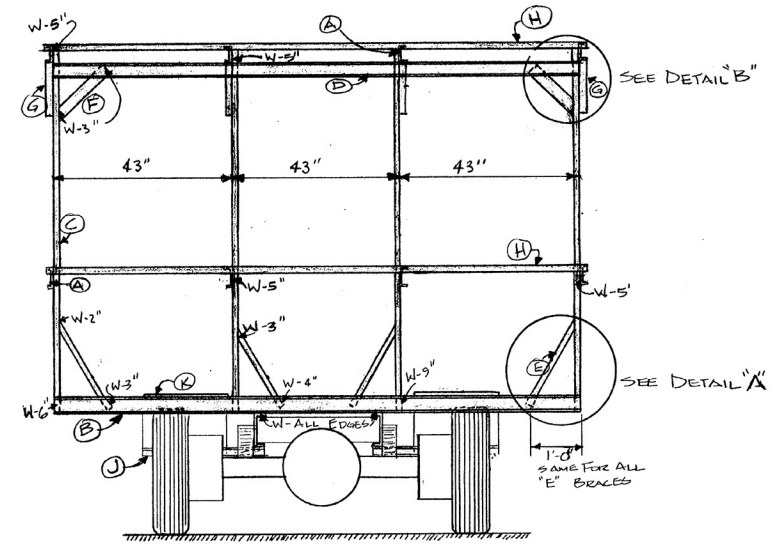

REAR VIEW

NOTE: W-3" DENOTES MINIMUM TOTAL LENGTH OF 1/4" FILLET WELD UNIFORMLY DISTRIBUTED OVER JOINT.

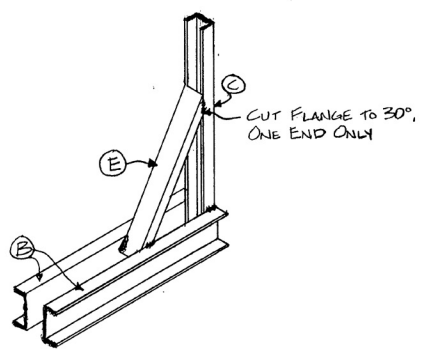

DETAIL "A"

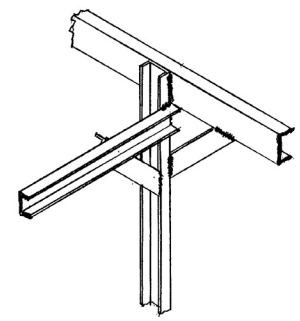

DETAIL "B"

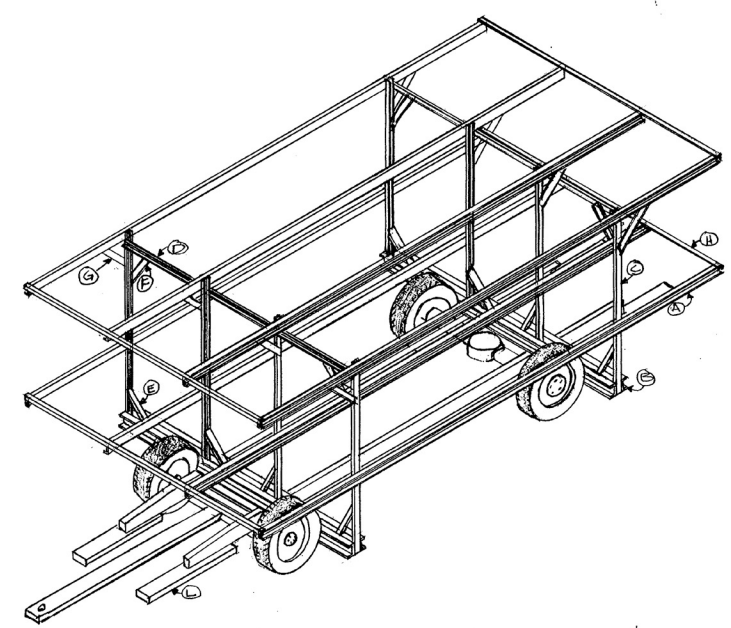

PERSPECTIVE VIEW

(WHEEL SHIELDS NOT SHOWN)

LIST OF MATERIALS (USE OLD TRUCK CHASSIS OR EQUAL HEAVY DUTY WAGON)

ITEM	SIZE	LENGTH	QUANTITY
A RAILS	4" x 1 5/8" x .180" CHANNEL	24'	8
B BOTTOM CROSS BEAM	5" x 1 3/4" x .190" CHANNEL	11'	4
C POSTS	3" x 1 1/2" x .170" CHANNEL	8'	8
D TOP CROSS BEAM	3" x 1 1/2" x .170" CHANNEL	11'	2
E BRACE, POST	3" x 1 1/2" x .170" CHANNEL	2'-3"	8
F BRACE, TOP CROSS BEAM	3" x 1 1/2" x .170" CHANNEL	1-6"	4
G BRACE, RAILS	3" x 1 1/2" x .170" CHANNEL	2'	8
H STICK STOP	1 1/2" x 1 1/2" x 1/8" ANGLE	11'-3"	4
J SHIELD ANGLE SUPPORT	1 1/2" x 1 1/2" x 1/8" ANGLE	3'	4
K WHEEL SHIELD	24 GA. STEEL, 24" WIDE	4'4"	4
L FOOT EXTENSION BOARDS	2x8 ROUGH OAK	3' to 4' AS DESIRED	4

BOLTS AS REQUIRED TO FASTEN EXTENSION BOARDS TO CHASSIS.

TOTAL STEEL = APPROX. 1900 lbs

COOPERATIVE EXTENSION WORK IN
AGRICULTURE AND HOME ECONOMICS
DEPARTMENT OF AGRICULTURAL ENGINEERING
COLLEGE OF AGRICULTURE
UNIVERSITY OF KENTUCKY &
U.S. DEPARTMENT OF AGRICULTURE COOPERATING

-TOBACCO HAULING WAGON-

24' LONG, 3 TIER WIDE, 2 HIGH, STEEL

Designed By: G.A. DUNCAN	Sheet 1 of 1
Checked By:	Plan Number:
Drawn By: G. WHITE	KY. 11.735.52
Date: Aug '70, Rev Jn '77	