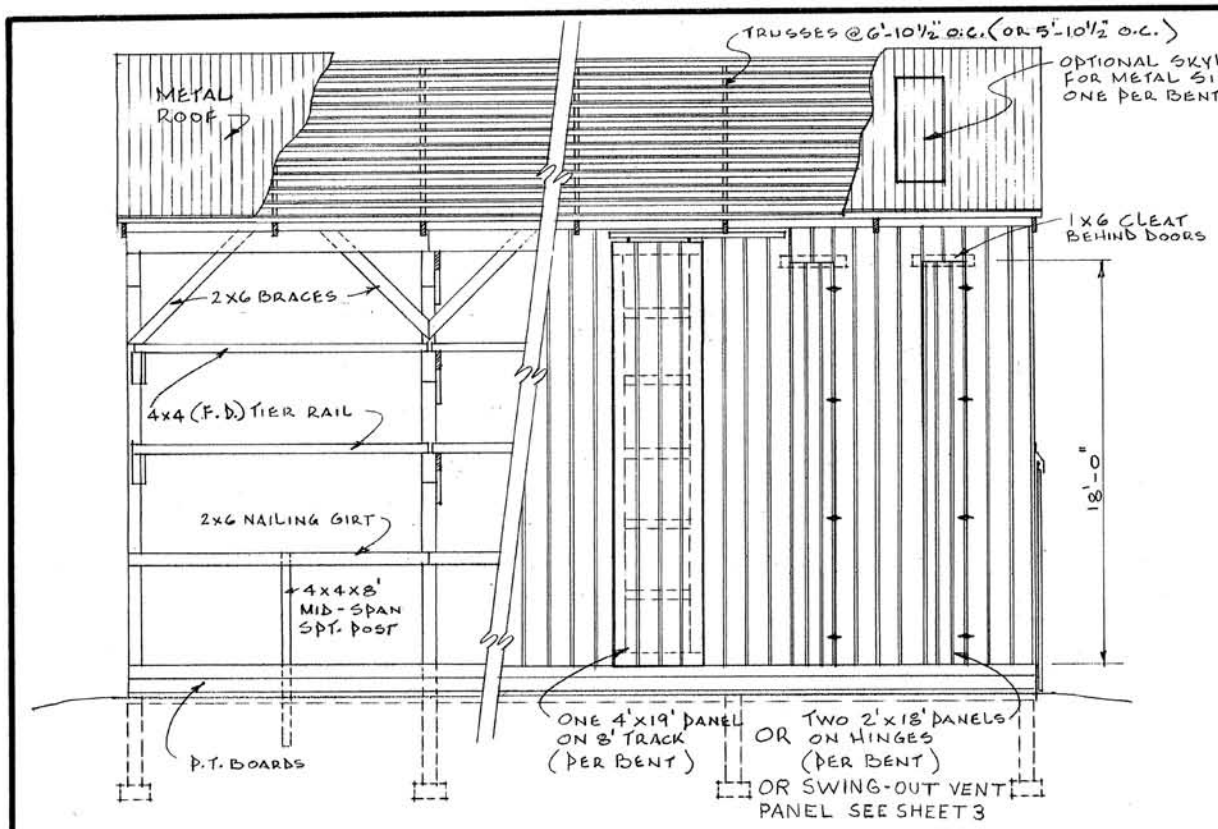

SIDE ELEVATION SCALE: 3/16" = 1'-0"

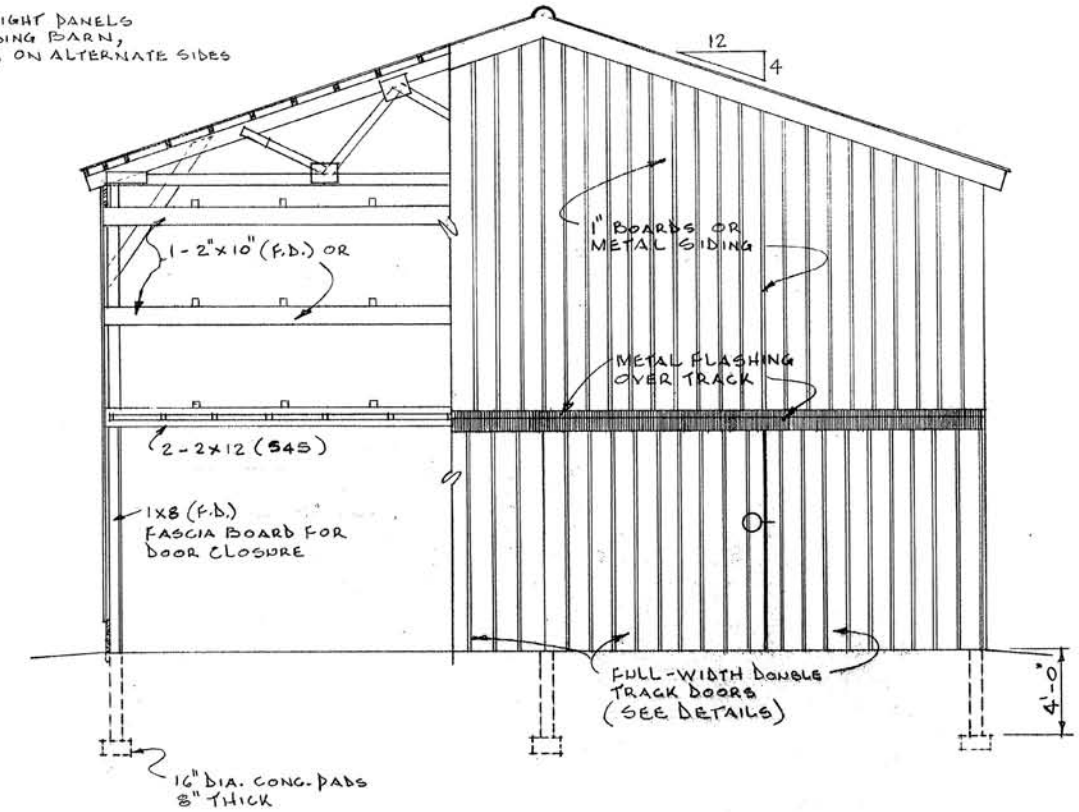

END ELEVATION SCALE: 3/16" = 1'-0"

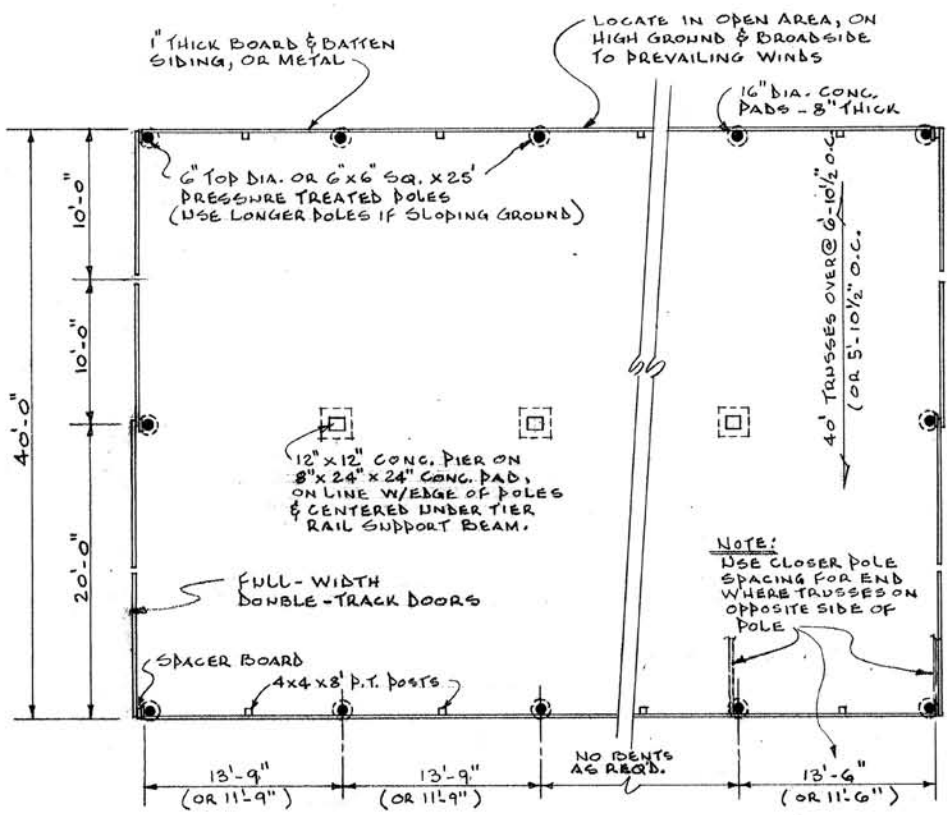

FLOOR PLAN
SCALE: 1/8" = 1'-0"

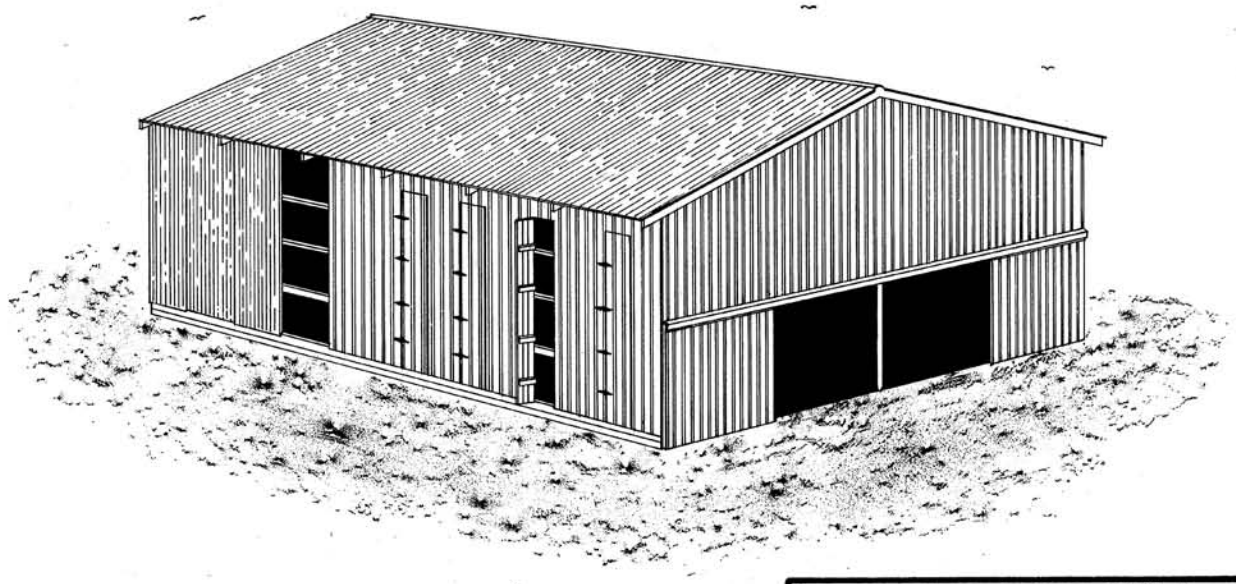

"THESE PLANS ARE FOR USE AS A CONSTRUCTION GUIDE. IF A CONSTRUCTION CONTRACT IS TO BE MADE, WRITTEN SPECIFICATIONS ARE NEEDED."

COOPERATIVE EXTENSION WORK IN
AGRICULTURE AND HOME ECONOMICS
DEPARTMENT OF AGRICULTURAL ENGINEERING
COLLEGE OF AGRICULTURE
UNIVERSITY OF KENTUCKY &
U.S. DEPARTMENT OF AGRICULTURE COOPERATING

3-TIER AIR-CURE BURLEY BARN
40' WIDE, TRUSSED ROOF

Designed By: G.A. DUNCAN	Sheet 1 of 4
Checked By: G.A. DUNCAN	Plan Number:
Drawn By: B.E. PASTER	KY. 11. 735-30
Date: REV. 12-71, 4-74	

REVIEWED 1974

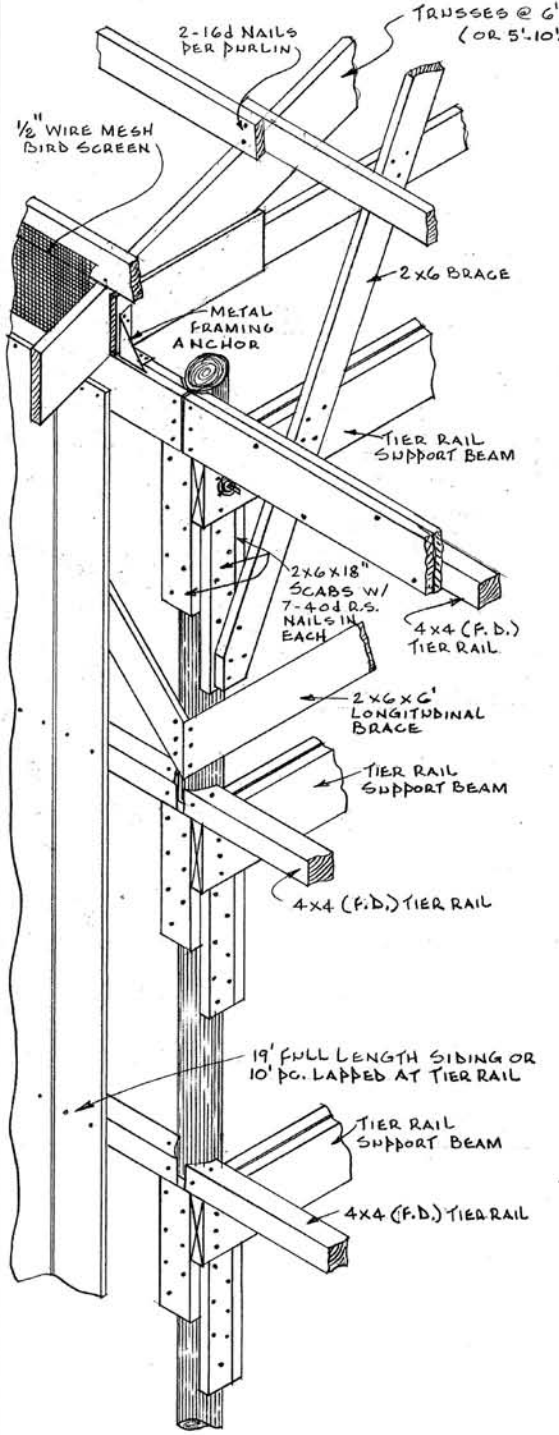

SIDEWALL DETAIL AT POLE

NO SCALE:

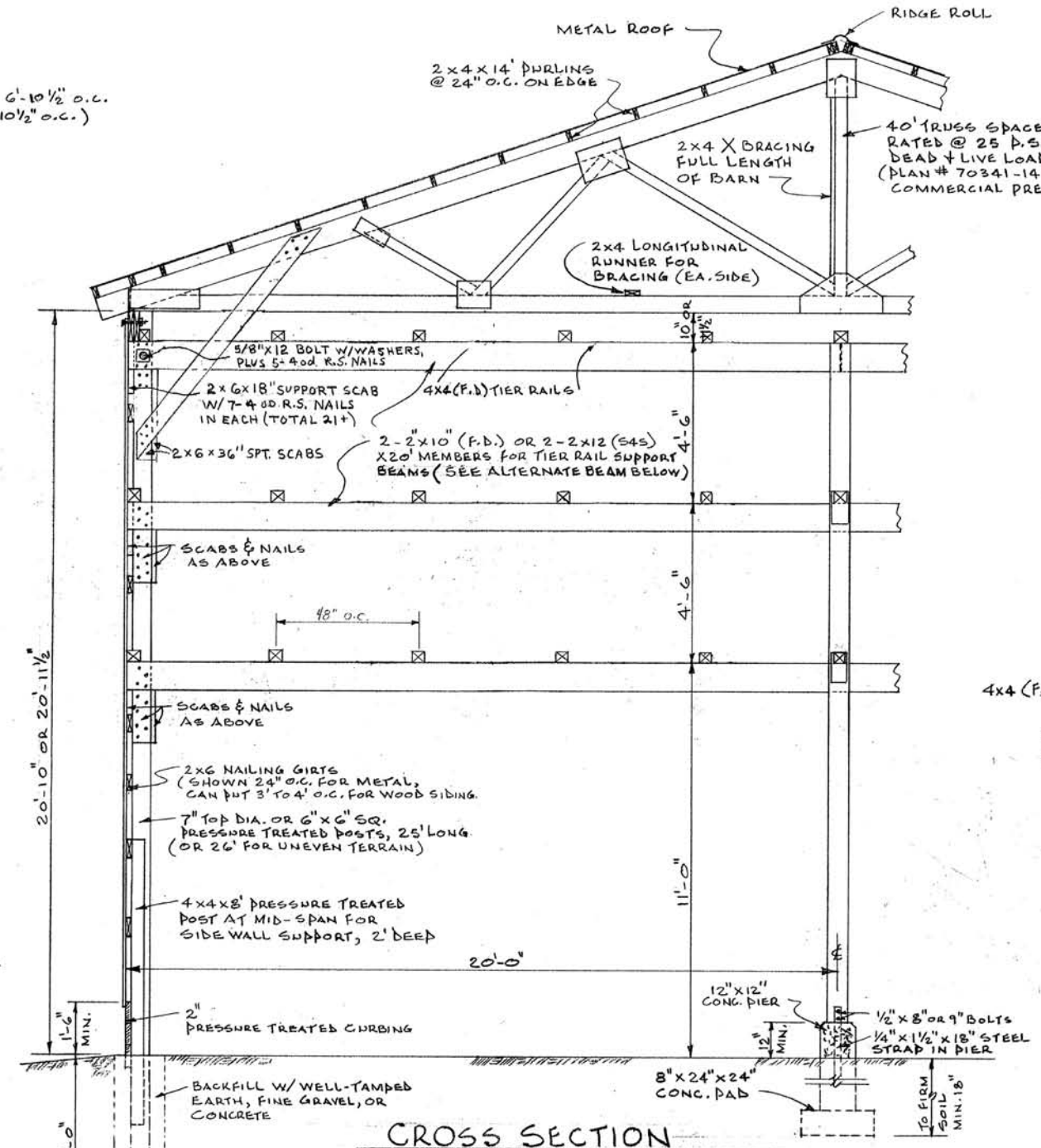

CROSS SECTION

SCALE 3/8" = 1'-0"

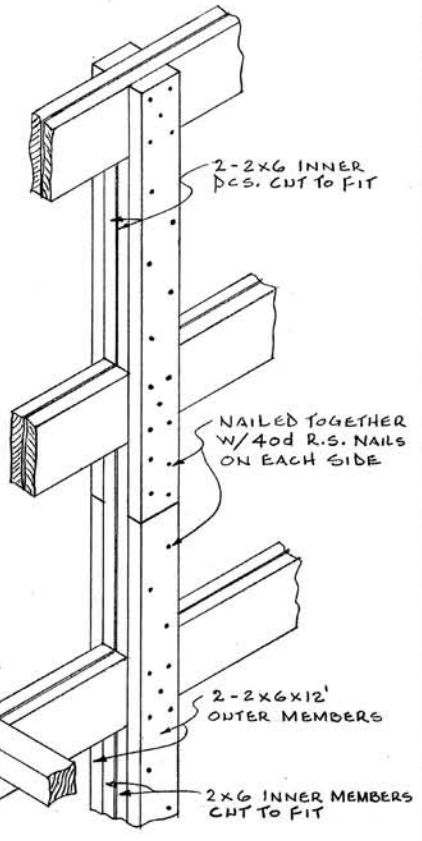

DETAIL OF CENTER BUILT-UP POST

NO SCALE

NOTE:
(F.D.) = FULL DIMENSION SIZE MEMBERS

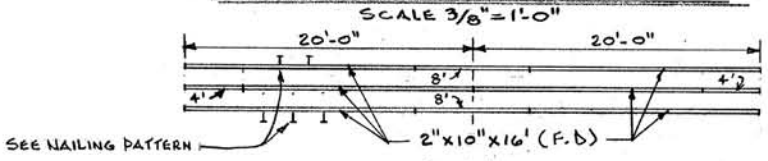

DETAIL OF ALTERNATE 40' BUILT-UP BEAM USING 16' LUMBER

NO SCALE

NOTE:
NAIL MEMBERS TOGETHER SNUGLY WITH 5" SCREW-SHANK POLE BARN NAILS AT SPACING SHOWN AT RIGHT

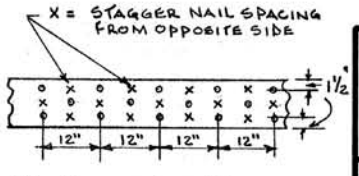

NAILING PATTERN

COOPERATIVE EXTENSION WORK IN
AGRICULTURE AND HOME ECONOMICS
DEPARTMENT OF AGRICULTURAL ENGINEERING
COLLEGE OF AGRICULTURE
UNIVERSITY OF KENTUCKY &
U.S. DEPARTMENT OF AGRICULTURE COOPERATING

3-TIER AIR-CURE BURLEY BARN
40' WIDE, TRUSSED ROOF

Designed By: G.A. DUNCAN	Sheet 2 of 4
Checked By: G.A. DUNCAN	Plan Number:
Drawn By: B.E. DASTER	KY. 11.735-30
Date: REV. 12-71, 4-74	

REV. 1-78

REVIEWED 19

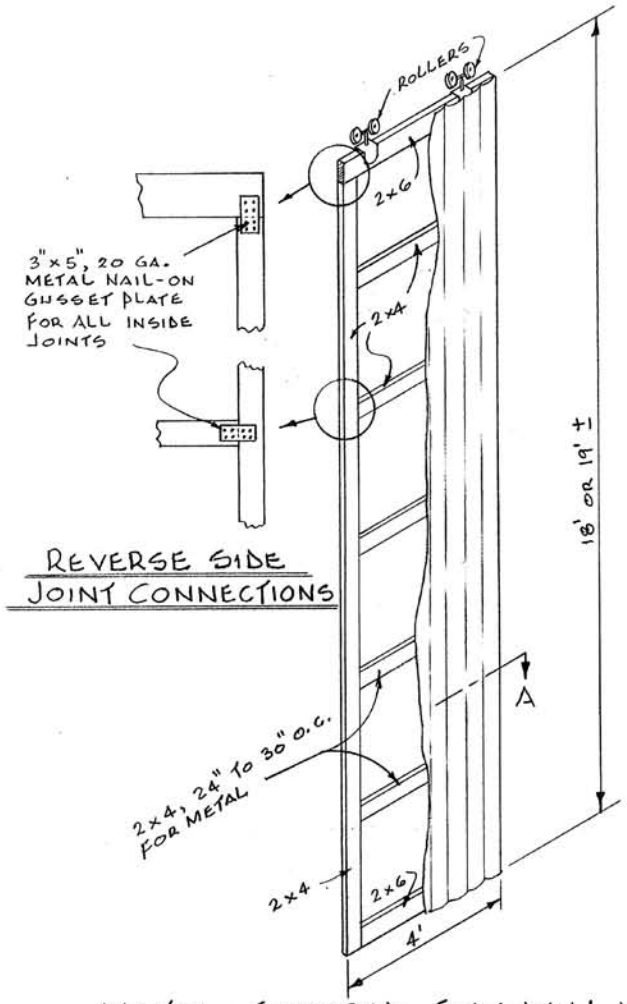

REVERSE SIDE JOINT CONNECTIONS

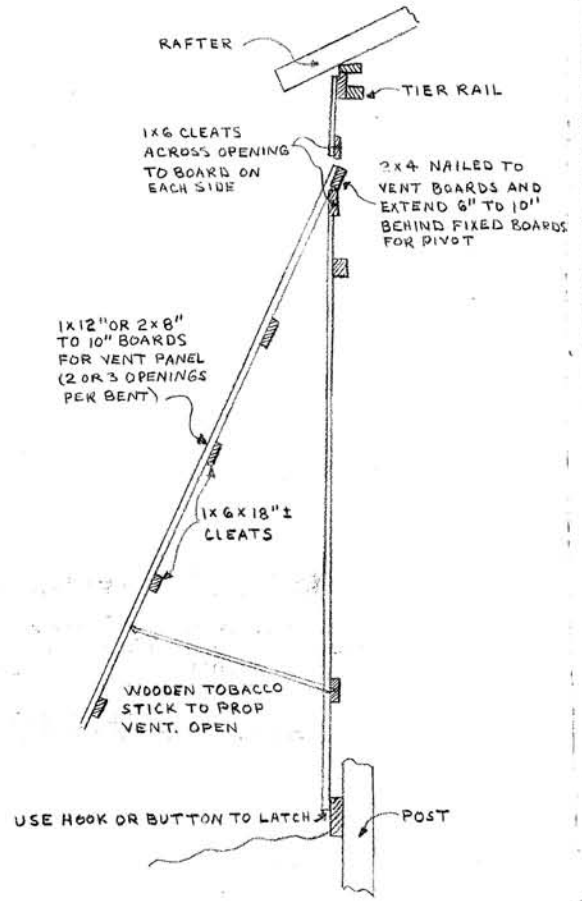

ECONOMY "HINGELESS SWINGOUT" VENT PANEL

METAL-COVERED SIDE WALL VENT DOORS ON TRACK

SCALE 3/8"=1'-0"

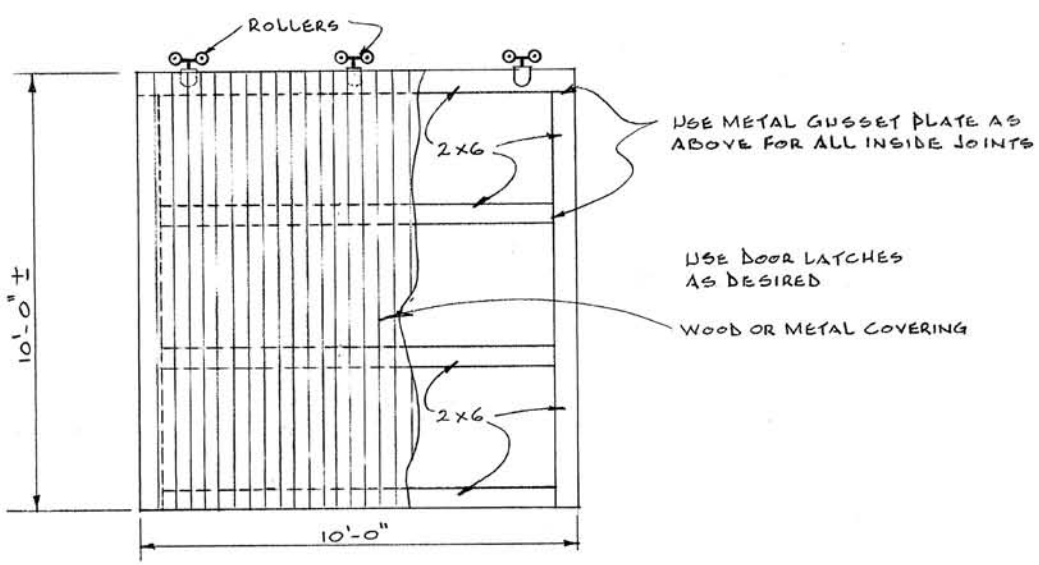

END ENTRANCE DOORS ON TRACK

SCALE 3/8"=1'-0"

MATERIALS AND CONSTRUCTION NOTES

1. Use good quality full dimension (F.D.) rough sawn lumber, or dressed (S4S) lumber of Standard grade Douglas Fir, No. 2 Southern Yellow Pine, equivalent or better, of the sizes specified on the plans.

2. Use RING SHANK OR SCREW SHANK Pole Barn nails for superior holding strength, especially for all connections to Pres. Trtd. Poles and all softwood lumber nailing. Use 40d (5") nails for framing - to - Pres. Trtd. Pole joints, use 12d or 16d for all dressed (S4S) lumber framing, or 16d (3 1/2") for rough lumber framing.

3. Use RING SHANK OR SCREW SHANK roofing nails with neoprene washer or lead-under-head per mfgrs. specs. for all metal roofing or siding attachment.

4. Use heavy-duty double-track with adequate hangers, rollers, etc., for entrance doors.

5. Preservative treated poles, posts, and curbing boards shall be Creosote, Penta, or Osmose K-33 treated to rentention rate specified by A.W.P.A. for ground contact use.

6. BARN CAPACITY (Acres Per 13'-9" Bent):

			6 plants/stick				5 plants/stick			
Stick Spacing:			10"	9"	8"	7"	9"	8"	7"	6"
Sticks Per Rail:			17	19	21	24	19	21	24	28
Plants/Acre	8,500	* 36	.43	.48	.53	.61	.40	.44	.51	.59
		* 30	.36	.40	.44	.51	.33	.37	.42	.49
	9,250	* 36	.40	.44	.49	.56	.37	.41	.47	.54
		* 30	.33	.37	.41	.47	.31	.34	.39	.45
	10,000	* 36	.37	.41	.45	.52	.34	.38	.43	.50
		* 30	.31	.34	.38	.43	.28	.32	.36	.42

* Tier Spaces per Bent, 36 for 40" o-c spacing, 30 for 48" o-c spacing.

7. For further information on tobacco barn types and new methods of harvesting and housing tobacco. See publication, Misc. 393, "Burley Mechanization" and other available literature.

COOPERATIVE EXTENSION WORK IN
AGRICULTURE AND HOME ECONOMICS
DEPARTMENT OF AGRICULTURAL ENGINEERING
COLLEGE OF AGRICULTURE
UNIVERSITY OF KENTUCKY &
U.S. DEPARTMENT OF AGRICULTURE COOPERATING

3-TIER AIR-CURE BURLEY BARN
40' WIDE, TRUSSED ROOF

Designed By: G.A. DUNCAN	Sheet 3 of 4
Checked By: G.A. DUNCAN	Plan Number:
Drawn By: D.E. PASTER	KY. 11.735-30
Date: REV. 12-71, 4-74	

REVIEWED 1974

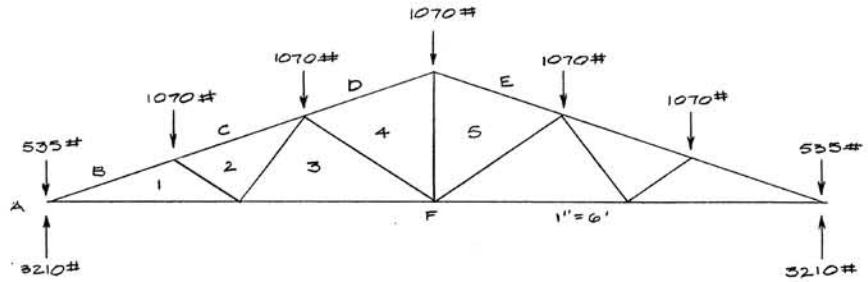

SPACE DIAGRAM

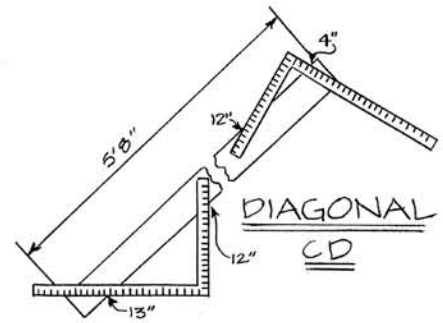

DIAGONAL CD

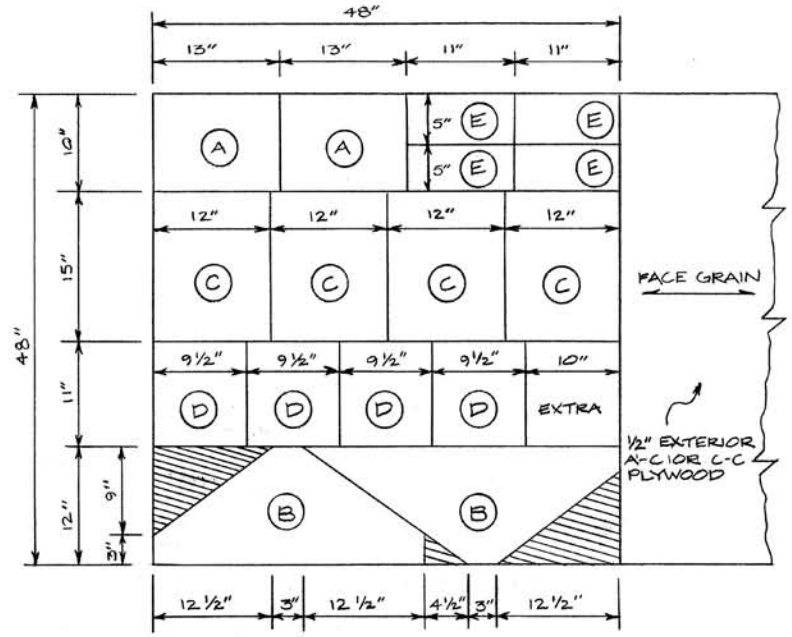

PLYWOOD GUSSET CUTTING DIAGRAM

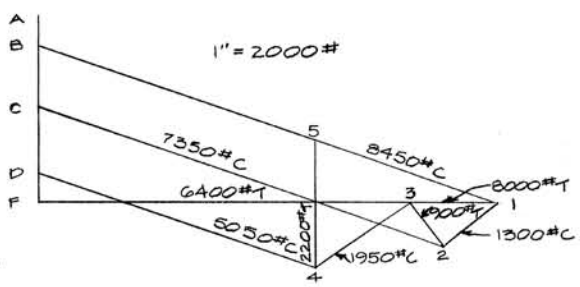

STRESS DIAGRAM

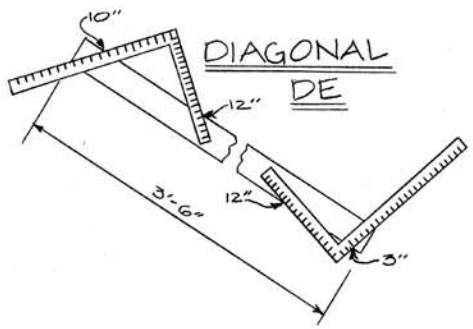

DIAGONAL DE

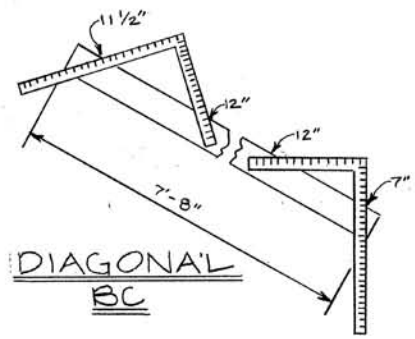

DIAGONAL BC

NOTES:

1. TRUSS DESIGNED FOR 40 P.S.F. AT SPACING OF 4' O.-C.
2. TRUSS MAY BE SPACED UP TO 6' O-C WITH 27 P.S.F. ROOF, WIND AND SNOW LOAD RATING, OR 6'-9" O.-C. WITH 24 P.S.F. RATING.
3. USE KD STANDARD GRADE DOUGLAS FIR, #2 SOUTHERN PINE, OR EQUIVALENT WITH FIBER STRESS = 1500 PSI.

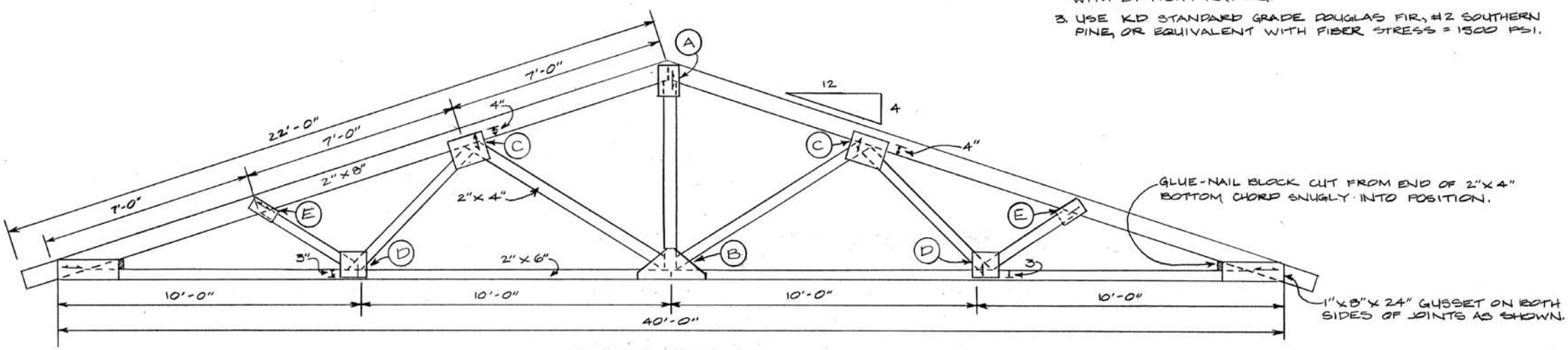

ELEVATION

1. USE 1x8 #1 PINE, KD, S4S, FREE OF KNOTS FOR HEEL GUSSETS, USE 1/2" EXTERIOR A-C OR C-C PLYWOOD FOR ALL OTHER GUSSET PLATES ON BOTH SIDES OF ALL JOINTS.
2. ALL GUSSET PLATES ARE GLUED AND NAILED IN PLACE. (NAILS HOLD GUSSET TIGHT WHILE GLUE SETS). SPACE NAILS APPROX. 3" APART AND DRIVE TIGHT.
3. USE RESORCINOL RESIN GLUE AND 6D BOX NALS.
4. MIX GLUE ACCORDING TO MANUFACTURERS' SPECIFICATIONS AND APPLY TO BOTH SURFACES TO BE JOINED.
5. ALL TRUSS MEMBERS ARE IN THE SAME PLANE AND ALL JOINTS ARE BUTT JOINTS.
6. TRUSS MEMBERS ARE CUT TO LENGTH AND THE TRUSS IS ASSEMBLED IN A JIG IN A HORIZONTAL POSITION. (SEE PLAN KY. 11.70341-B).
7. THE ASSEMBLED TRUSS MAY BE MOVED CAREFULLY FROM THE JIG IMMEDIATELY AFTER GUSSET PLATES HAVE BEEN APPLIED.
8. LEAVE TRUSSES STACKED IN A HORIZONTAL POSITION FOR AT LEAST 24 HOURS AFTER ASSEMBLY IN 70° F. OR HIGHER TEMPERATURE FOR GLUE TO SET.
9. TRUSSES MAY BE PLACED ON FRAME WALLS, MASONRY WALLS, OR POLE CONSTRUCTION. (SEE PLAN KY. 11.70341-A).

BILL OF MATERIALS

MEMBERS	NO. PCS.	SIZE	BD. FT.
TOP CHORD	2	2 X 8 X 22'	59.
LOWER CHORD	2	2 X 6 X 20'	40.
DIAGONAL D-E	2	2 X 4 X 3'-6"	4.7
DIAGONAL B-C	2	2 X 4 X 7'-8"	10.3
DIAGONAL C-D	2	2 X 4 X 5'-8"	7.7
POST A-B	1	2 X 4 X 6'-2"	4.1
HEEL GUSSETS	2	1 X 8 X 24"	2.7
			128.5
PLYWOOD GUSSETS	1	1/2" X 48" X 48"	
6D BOX NAILS	1 LB.		
RESORCINOL RESIN GLUE	2 PINTS		

3-TIER AIR-CURE BURLEY BARN
40' WIDE, TRUSSED ROOF

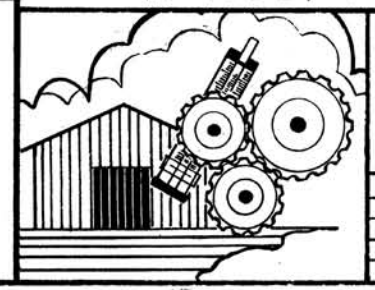

COOPERATIVE EXTENSION SERVICE
AGRICULTURE AND HOME ECONOMICS
DEPARTMENT OF AGRICULTURAL ENGINEERING
COLLEGE OF AGRICULTURE
UNIVERSITY OF KENTUCKY
AND
U.S. DEPARTMENT OF AGRICULTURE COOPERATING

DESIGNED BY: G. A. DUNCAN	SHEET 4 OF 4
CHECKED BY: G. A. DUNCAN	PLAN NUMBER
DRAWN BY: S. ELLIOTT	KY. II. 735-30
DATE: DEC. 1971	
REVISIONS: FEB. 1986	