VENTED RIDGE CAP
METAL ROOFING
1x4 PURLINS @ 24" O.C.
TRUSSES @ 2'-0" O.C. RATED @ 25 P.S.F.
METAL FRAMING ANCHOR
2'-2½"
2x6 TOP PLATE
2x4 FASCIA
1x6 HINGED DOOR
½" EXT. PLYWOOD
2'-0"
2x4 BRACE @ 4'-0" O.C.
METAL SIDING
2x6 BOTTOM PLATE
½" x 20" ANCHOR BOLTS @ 6'-0" O.C. (FILL TOP 2 BLOCKS W/MORTAR WHERE ANCHOR BOLTS ARE)
8" CLAY TILE W/ COVER FOR PUMP STATIONS
INSTALL TILE LOW ENOUGH TO PREVENT WASTE FROM ENTERING EXHAUST AIR DUCT
½" EXT. PLYWOOD CEILING
6" FIBERGLASS INSULATION W/ VAPOR BARRIER FACING INSIDE
½" EXT. PLYWOOD
2x6 STUD WALL @ 2'-0" O.C.
6" FIBERGLASS INSULATION
4 MIL POLYETHYLENE VAPOR BARRIER
NOTE
USE WATERPROOF SEALANT ON CEILING & WALLS
FEED AUGER
12
4
SEE DETAIL A (SHEET 3)
7'-8"
FENCE LINE
12 HOLE FEEDER
12 HOLE FEEDER
½" CLEARANCE
4½" CONC. SLAB W/ 6x6 #10 WIRE MESH
SLOPE ½"/FT
½" RISE
6" LIGHT WEIGHT CONC BLOCK FILLED W/ INSULATION
½" CLEARANCE
8" CLAY TILE W/ COVER FOR PUMP STATIONS
10' SLATS
AIR
AIR
10' SLATS
MAX LIQUID LEVEL
HORIZ. JOINT REINF. EVERY OTHER COURSE
8" CONC. BLOCK FILLED W/ CONCRETE & #4 BARS @ 16" O.C.
EXHAUST AIR DUCT
8" CORNER BLOCK ON EDGE FOR AIR MOVEMENT (SEE ELEV A-A SH. 3 FOR LOCATION
PIT
PIT
45°
12" STANDARD WEIGHT CONC. BLOCK (BELOW GRADE) FILLED W/ CONCRETE & #4 BARS @ 16" O.C.
4'-8"
4" CONC. SLAB W/ 6x6 #10 WIRE MESH REINF'G.
4"
3/8" CEMENT-SAND-PLASTER (1-3 MIX) INSIDE WALL
4" CRUSHED STONE
8"
HORIZ. JOINT REINF'G. EVERY OTHER COURSE (EVERY COURSE AT CORNERS)
#4 BARS (24" LONG) @ 12' O.C.
#4 BARS (24" LONG) @ 12' O.C.
1'-8"
8'-6"
4'-4"
8'-6"
1'-8"

CROSS SECTION SCALE: ½" = 1'-0"

6" CONC. BLOCK & 2x6 STUD WALL @ 2'-0" O.C. W/ ½ EXT PLYWOOD SIDING
8" CLAY TILE FOR PUMP STATIONS
10' SLATS
12 HOLE FEEDER
10' SLATS
SEE DETAIL B (SHEET 3)
10'-0"
24'-0"
4½" CONC SLAB
36" GATES
36"
36"
FEED BIN
FEED AUGER
10'-0"
10' SLATS
10'-0"
10'-0"
9'-6"
60'-0"

FLOOR PLAN SCALE. ⅛" = 1'-0"

SWINE GROWING BUILDING

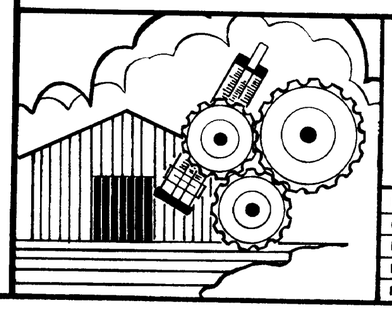

COOPERATIVE EXTENSION SERVICE
AGRICULTURE AND HOME ECONOMICS
DEPARTMENT OF AGRICULTURAL ENGINEERING
COLLEGE OF AGRICULTURE
UNIVERSITY OF KENTUCKY
AND
U S DEPARTMENT OF AGRICULTURE COOPERATING

DESIGNED BY R.F., D.O.	SHEET 2 OF 4
CHECKED BY J.N.W.	PLAN NUMBER
DRAWN BY D.E.P.	KY. II. 726-33
DATE 6-78	
REVISIONS 1-79 10-81	

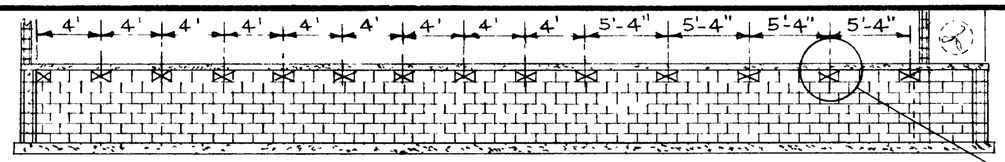

ELEVATION A-A

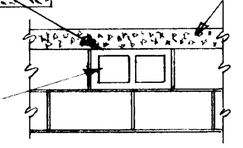

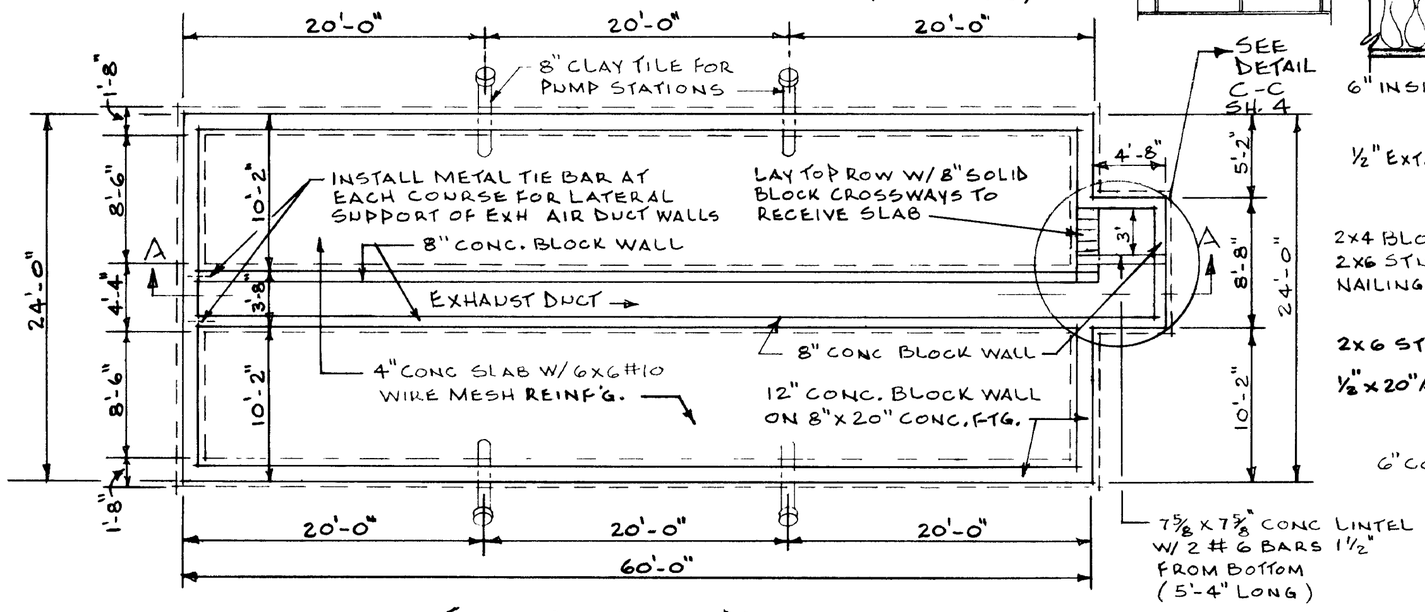

FOUNDATION PLAN

SCALE: 1/8" = 1'-0"

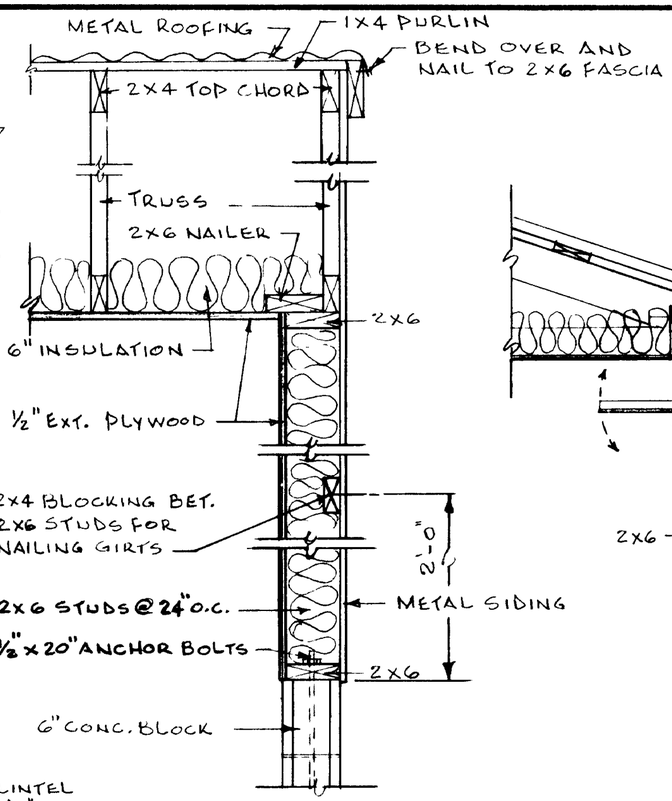

END WALL DETAIL B

SCALE: 1" = 1'-0"

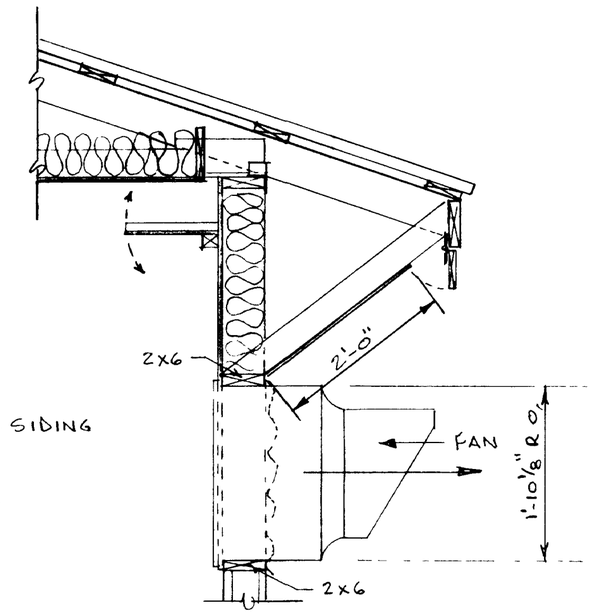

CROSS SECTION AT FAN

SCALE 3/4" = 1'-0"

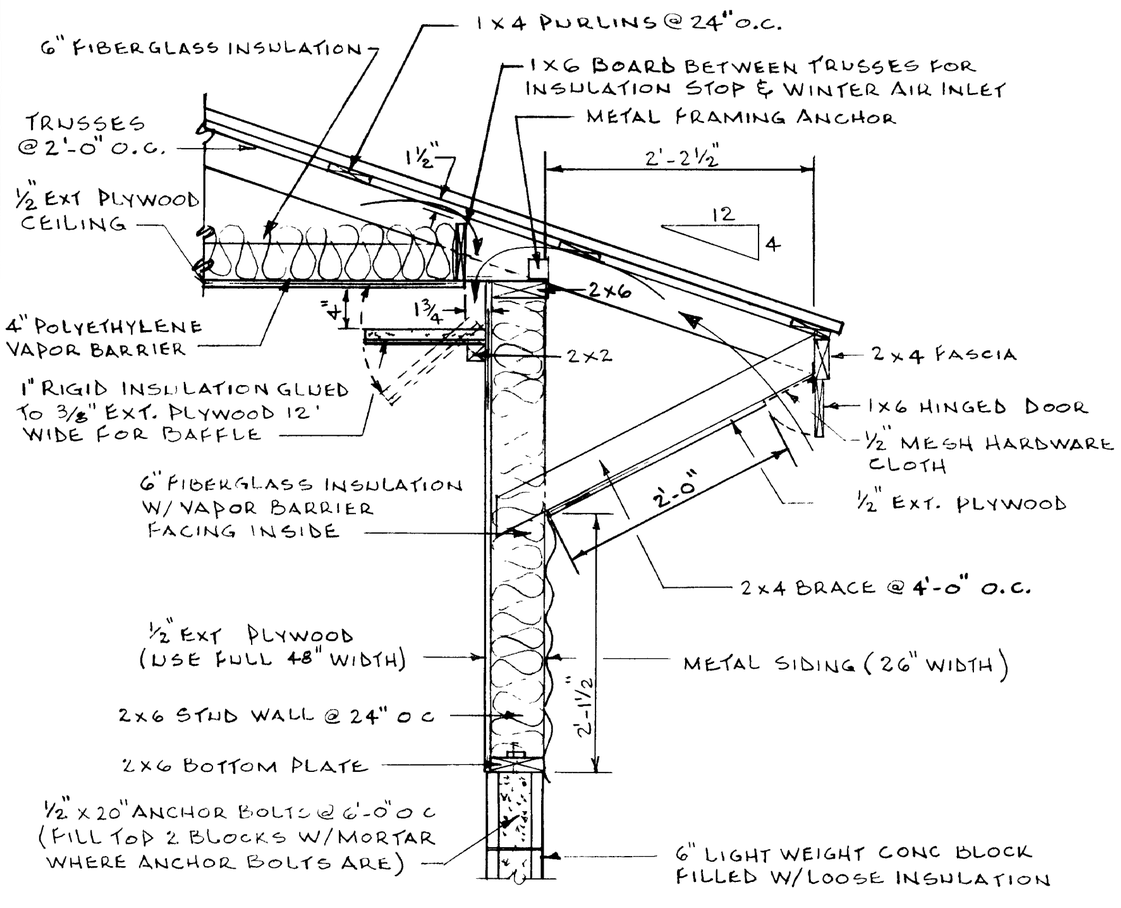

DETAIL A

SCALE: 1" = 1'-0"

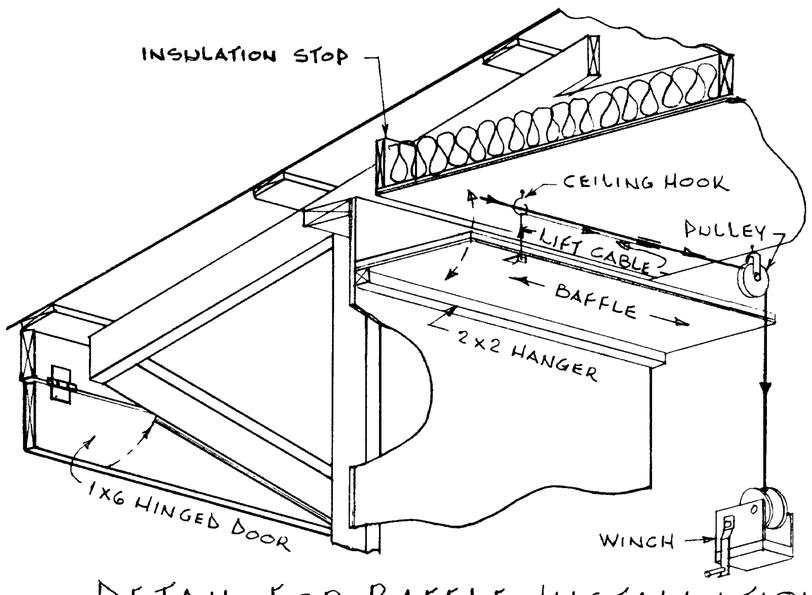

DETAIL FOR BAFFLE INSTALLATION

NTS

SWINE GROWING BUILDING

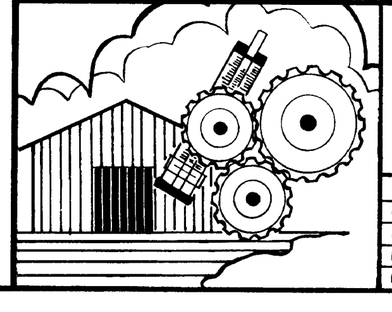

COOPERATIVE EXTENSION SERVICE
AGRICULTURE AND HOME ECONOMICS
DEPARTMENT OF AGRICULTURAL ENGINEERING
COLLEGE OF AGRICULTURE
UNIVERSITY OF KENTUCKY
AND
U S DEPARTMENT OF AGRICULTURE COOPERATING

DESIGNED BY R.F., D O	SHEET 3 OF 4
CHECKED BY J.N W	PLAN NUMBER
DRAWN BY B E P	KY. II. 726-33
DATE 6-78	
REVISIONS 1-79	

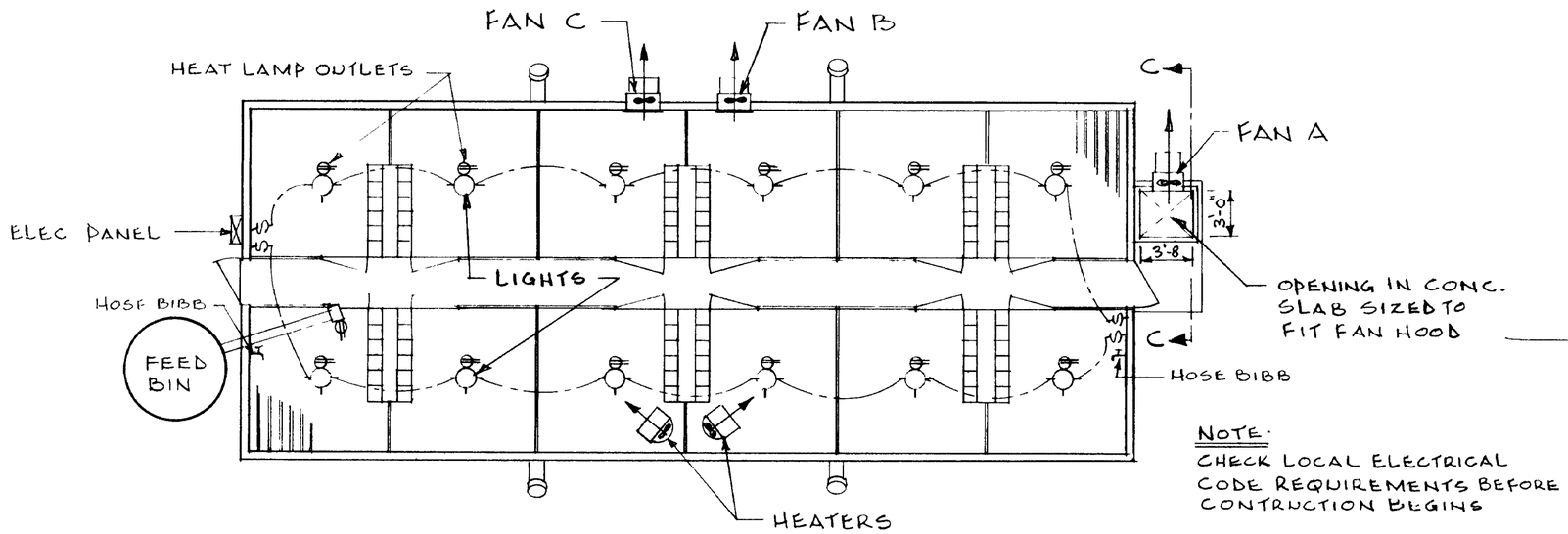

NOTE:
CHECK LOCAL ELECTRICAL CODE REQUIREMENTS BEFORE CONTRUCTION BEGINS

ELECTRIC, PLUMBING, HEATING & VENTILATION LAYOUT

SCALE: 1/8" = 1'-0"

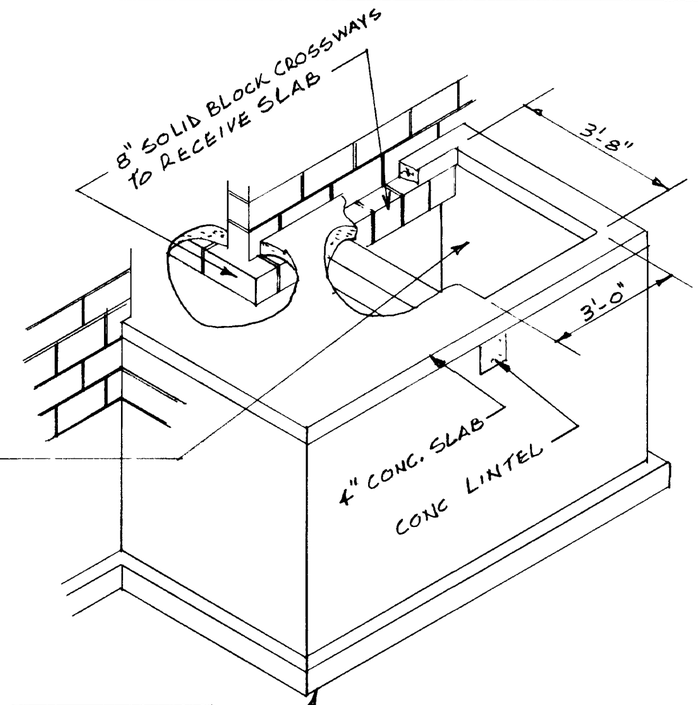

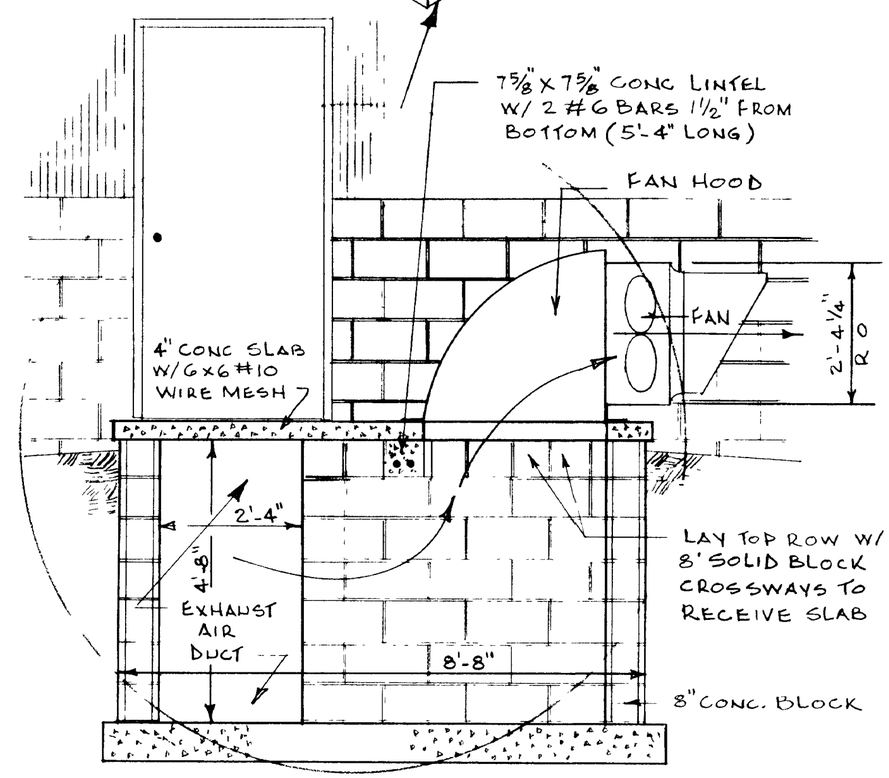

CROSS SECTION C-C SCALE 1/2" = 1'-0"

FAN TYPE AND RATING

FAN	TYPE	CFM RATING AT 1/8 INCH STATIC PRESSURE
A	VARIABLE SPEED	1200-4500
B	SINGLE SPEED	5000
C	SINGLE SPEED	5000

SUPPLEMENTAL HEATERS

MINIMUM REQUIREMENTS: 40,000 BTU PER HOUR TOTAL
20,000 BTU PER HOUR PER HEATER OR 6 KW
HEATER FANS SHOULD PROVIDE A 30 FT. THROW.

THERMOSTATS

THERMOSTAT	TYPE (FOR LINE VOLTAGE APPLICATIONS)
HEATER	OPEN ON RISE
FAN A	SOLID STATE CONTROL, WITH MINIMUM CUTOFF
FAN B	CLOSE ON RISE
FAN C	CLOSE ON RISE

THERMOSTAT LOCATION: NEAR CENTER OF BUILDING
AS LOW AS POSSIBLE BUT OUT OF ANIMAL REACH.
NOT IN A DIRECT LINE WITH THE HEATER OUTPUT.

FAN AND HEATER OPERATING SEQUENCE, AND BAFFLE SETTING

INSIDE TEMPERATURE	FAN A	FAN B	FAN C	HEATER	BAFFLE SETTING
ABOVE 85°F	MAXIMUM	ON	ON	OFF	12 INCHES
80°-85°	MAXIMUM	ON	OFF	OFF	1
70°-80°	VARIABLE	OFF	OFF	OFF	1/4
BELOW 70°	MINIMUM	OFF	OFF	ON	1/16

SWINE GROWING BUILDING

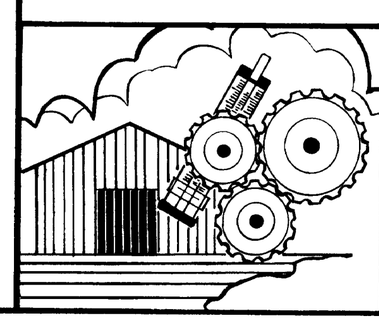

COOPERATIVE EXTENSION SERVICE
AGRICULTURE AND HOME ECONOMICS
DEPARTMENT OF AGRICULTURAL ENGINEERING
COLLEGE OF AGRICULTURE
UNIVERSITY OF KENTUCKY
AND
U S DEPARTMENT OF AGRICULTURE COOPERATING

DESIGNED BY R F, D O.
CHECKED BY J N W
DRAWN BY B E P.
DATE 6-78
REVISIONS 1-79

SHEET 4 OF 4

PLAN NUMBER
KY. II. 726-33

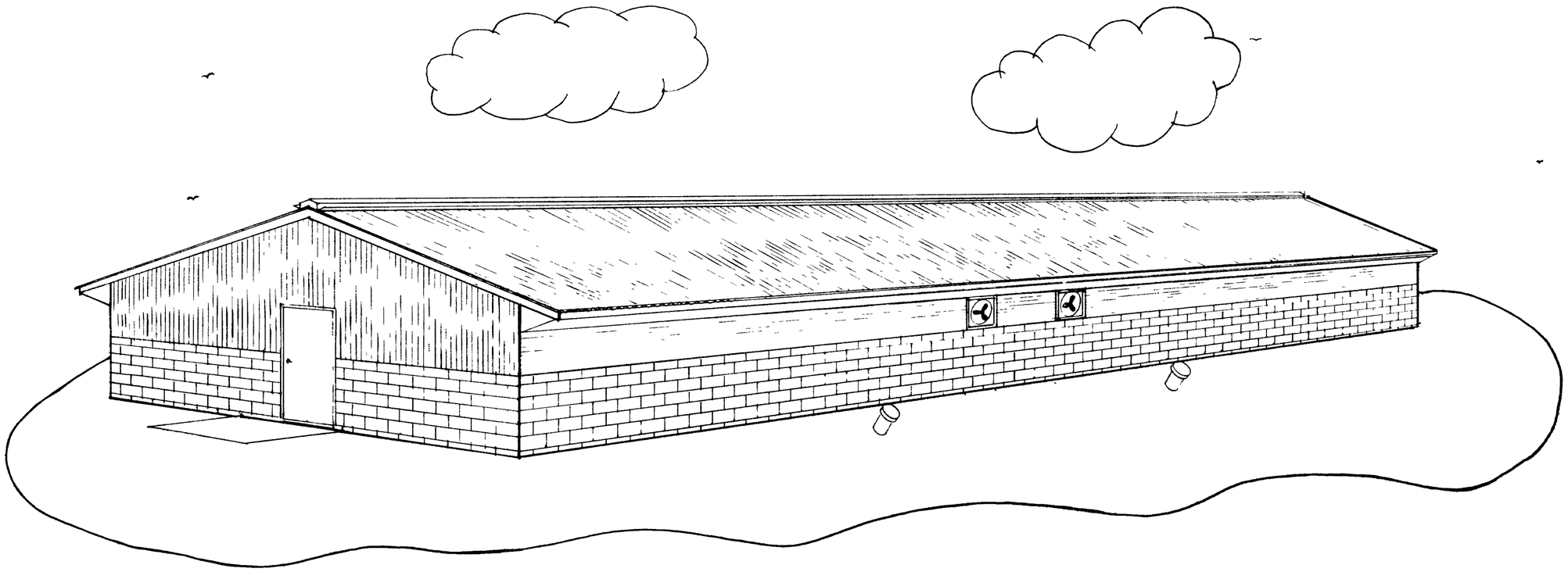

THIS PLAN IS FOR A 24'X60' BUILDING HOUSING 300 PIGS FOR 6 WEEKS AS THEY GROW FROM 40 TO 100 POUNDS. THE BUILDING IS TOTALLY SLATTED AND COMPLETELY FAN VENTILATED WITH BOTH VARIABLE AND SINGLE SPEED EXHAUST FANS. MANURE IS STORED AS A LIQUID IN A DEEP PIT BENEATH THE SLATS. WINTER VENTILATION AIR IS EXHAUSTED FROM THE MANURE PIT WHICH AIDS IN CONTROLLING ODORS. SUPPLEMENTAL HEAT IS PROVIDED TO ENSURE THE COMFORT OF THE PIG DURING PERIODS OF EXTREME WEATHER.

THE PURPOSE OF THIS BUILDING IS TO PROVIDE A SUITABLE ENVIRONMENT FOR THE PIG UNTIL HE IS ABLE TO PERFORM IN THE COLDER ENVIRONMENT, A NATURALLY VENTILATED FINISHING BUILDING. THE BUILDING IS DIVIDED INTO 12 PENS TO HOLD 25 PIGS EACH.

THIS PLAN IS ONE OF A COMPLETE SWINE PRODUCTION SYSTEM WHICH INCLUDES PLANS 11 726-31, FARROWING BUILDING; 11 726-32, NURSERY BUILDING; 11 726-33, GROWING BUILDING; 11 726-34, FINISHING BUILDING; 11 726-35, GESTATION BUILDING, 11 726-36, BREEDING BUILDING.

SIZING YOUR GROWER TO FIT YOUR PRODUCTION SYSTEM

LITTERS FARROWED PER GROUP*	REQUIRED GROWER CAPACITY
10	116
12	200
14	233
16	266
18	300
20	332
22	365
24	400

*GROUPS FARROW EVERY THREE WEEKS; CAPACITY FOR 2 GROUPS

ELECTRICAL POWER OUTAGES

SERIOUS PROBLEMS CAN BE ENCOUNTERED IN TOTALLY ENCLOSED SWINE BUILDING DURING AN ELECTRICAL POWER OUTAGE, WHEN THE VENTILATION FANS STOP. TO AVOID POSSIBLE PROBLEMS AN ENCLOSED SWINE BUILDING SHOULD BE EQUIPPED WITH AN AUTOMATIC WARNING SYSTEM TO ALERT YOU WHEN A POWER FAILURE HAS OCCURRED AND A STANDBY ELECTRICAL GENERATOR SHOULD BE AVAILABLE.

THERMOSTAT ADJUSTMENT

THE THERMOSTAT SETTINGS GIVEN BELOW ALLOW THE BUILDING TEMPERATURE TO VARY FROM A MINIMUM OF 70°F IN THE WINTER TO A MAXIMUM OF 85°F+ IN THE SUMMER.

THERMOSTAT	NORMAL SETTING
FAN A (LOW TEMPERATURE CUT OFF)	65°F
HEATER	70°
FAN A (SET POINT ON VARIABLE SPEED CONTROLER)	75°
FAN B	80°
FAN C	85°

NOTE: CHECK THE AIR TEMPERATURE AT THE LEVEL OF THE PIGS AND ADJUST THE THERMOSTATS IF YOUR READING IS SUBSTANTIALLY DIFFERENT FROM THE DESIRED TEMPERATURE.

WASTE STORAGE REQUIREMENTS

0 10 CUBIC FEET OF STORAGE PER DAY PER PIG
THIS FACILITY PROVIDES 35 DAYS OF MANURE STORAGE PER USEFUL FOOT OF PIT DEPTH, 90 DAYS STORAGE TOTAL.

NOTE: TWO FEET OF PIT DEPTH IS GENERALLY NOT CONSIDERED USABLE STORAGE VOLUME, BECAUSE SOME OF THE SOLIDS ARE NOT REMOVED DURING CLEANING AND THE LIQUID LEVEL SHOULD NOT BE ALLOWED WITHIN ONE FOOT OF THE BOTTOM OF THE SLATS.

DESIGN VENTILATION RATES AND SUPPLEMENTAL HEAT

MINIMUM 3-5 CFM PER PIG (VARIABLE SPEED FAN RECOMMENDED)
MAXIMUM 45-50 CFM PER PIG
SUPPLEMENTAL HEAT 65-70 BTU PER HOUR PER PIG

FEED AND WATER REQUIREMENTS

FEED: 4 5# PER PIG PER DAY - 9,450# TOTAL PER WEEK

WATER: 1 5 GAL PER DAY PER PIG
450 GAL PER DAY TOTAL
MINIMUM PUMPING RATE 8 GAL PER MINUTE

PEN AREA REQUIREMENTS

4 SQUARE PER PIG

WATER LINES:

WATER LINES ARE GENERALLY INSTALLED BY ATTACHING THEM BELOW THE CEILING.

SLATS:

CHECK WITH THE SLAT MANUFACTURERS ABOUT THE ABILITY OF THE SLATS TO SUPPORT THE FEEDERS.
SLOT OPENING: 1 INCH

ESTIMATED MATERIAL LIST:

1/2" EXT PLYWOOD	76	PC.
3/8" EXT. PLYWOOD	4	PC.
LUMBER (EXCLUDING TRUSSES)	2750	B.F.
24' TRUSSES (4/12 PITCH)	31	
6" LIGHT WEIGHT CONCRETE BLOCK	750	
8" STANDARD WEIGHT CONCRETE BLOCK	740	
12" STANDARD WEIGHT CONCRETE BLOCK	880	
CONCRETE (FLOOR, FOOTINGS & BLOCK FILL)	57	YDS.
6" INSULATION (CEILING & WALLS)	2112	SQ.FT.
10' SLATS	1200	SQ.FT.
METAL ROOFING & SIDING	2450	SQ.FT.

SWINE GROWING BUILDING

COOPERATIVE EXTENSION SERVICE
AGRICULTURE AND HOME ECONOMICS
DEPARTMENT OF AGRICULTURAL ENGINEERING
COLLEGE OF AGRICULTURE
UNIVERSITY OF KENTUCKY
AND
U S DEPARTMENT OF AGRICULTURE COOPERATING

DESIGNED BY R.F., D.O.	SHEET 1 OF 4
CHECKED BY J.N.W.	PLAN NUMBER
DRAWN BY BEP	KY. II. 726-33
DATE 6-78	
REVISIONS 1-79	