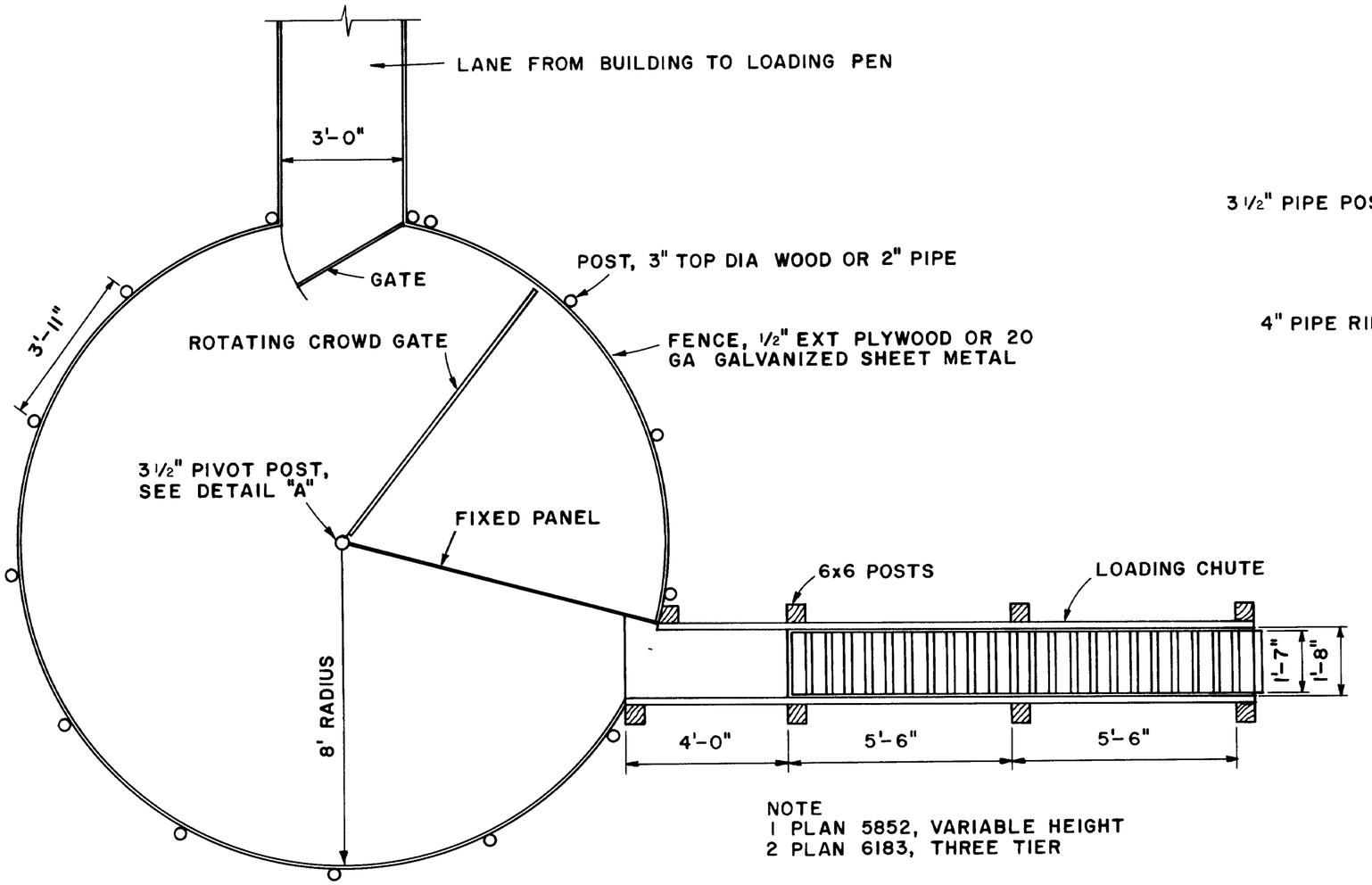

NOTE
1 PLAN 5852, VARIABLE HEIGHT
2 PLAN 6183, THREE TIER

PLAN

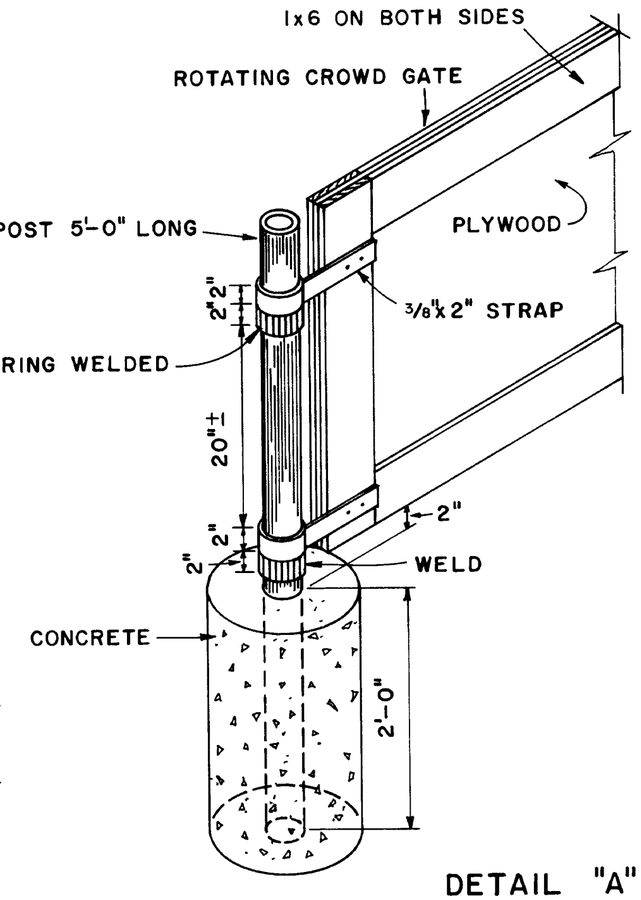

DETAIL "A"
SCALE 1"=1'-0"

CAPACITY OF LOADING PENS		
DIAMETER (FT)	FEEDER PIGS AT 2 SQ FT	MARKET HOGS AT 6 SQ FT
12	57	19
16	100	34
20	157	52
24	226	75
28	308	103
32	402	134

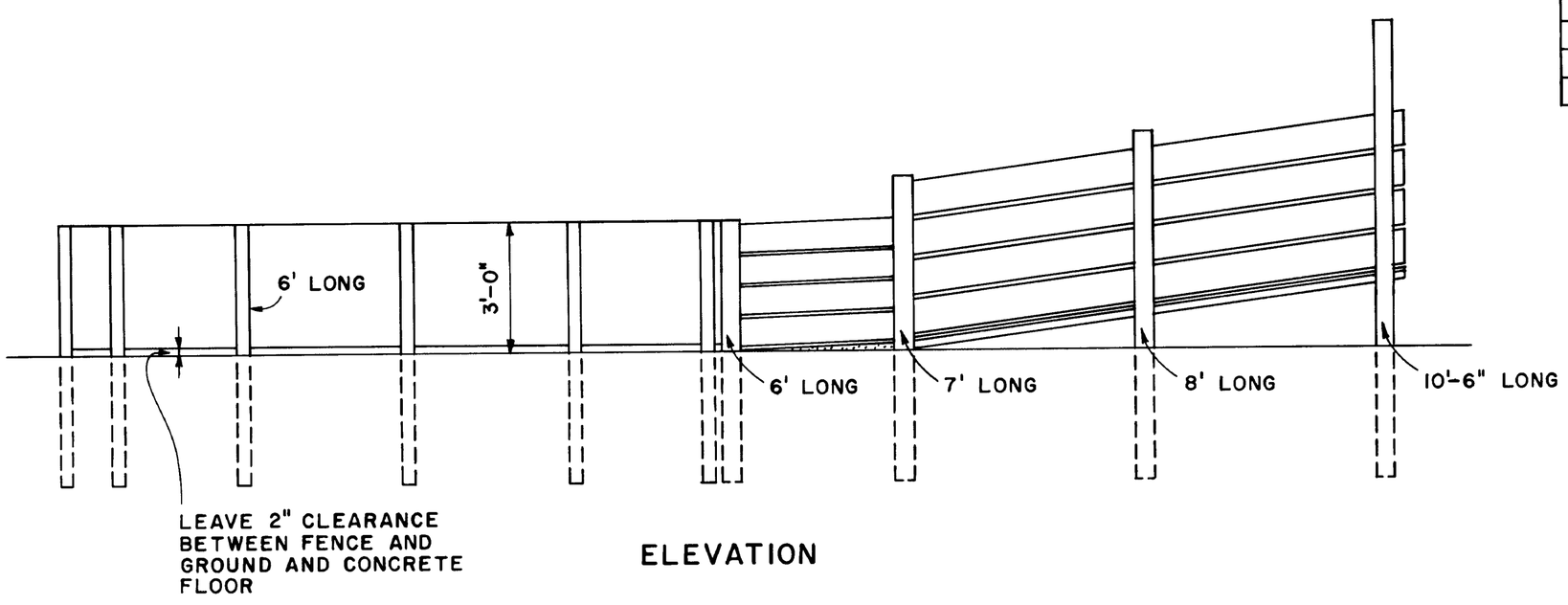

ELEVATION

SCALE 3/8"=1'-0" UNLESS OTHERWISE NOTED

COOPERATIVE EXTENSION WORK IN
AGRICULTURE AND HOME ECONOMICS
AND
UNITED STATES DEPARTMENT OF AGRICULTURE COOPERATING

CIRCULAR LOADING PEN
FOR SWINE

N C '75	6223	SHEET 1 OF 1

BASED ON N C. STATE UNIV PLAN NO 2180