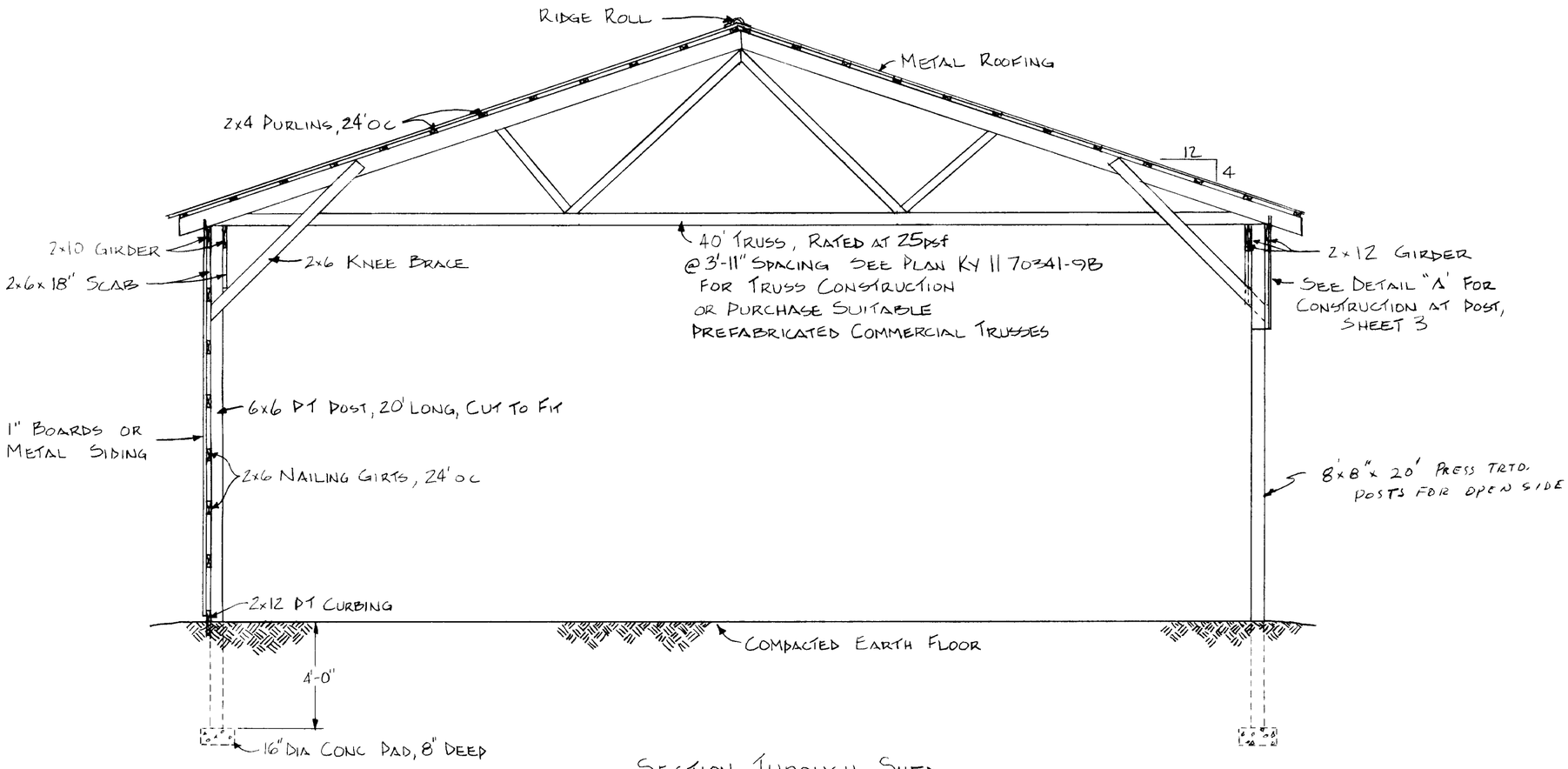

SECTION THROUGH SHED

SCALE 1/4 = 1'-0"

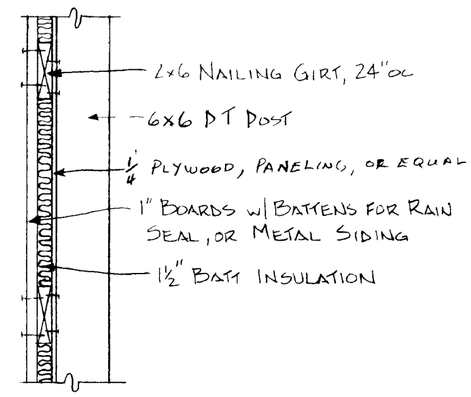

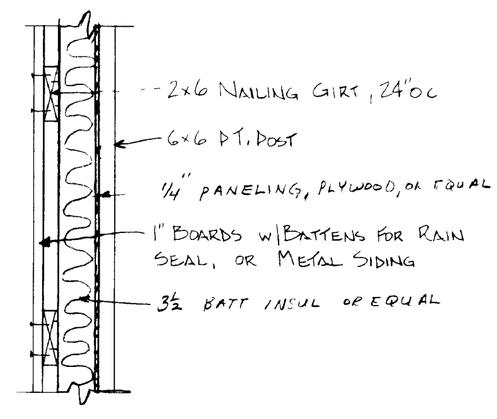

OPTIONS FOR SHOP WALL CONSTRUCTION

SCALE 1" = 1'-0"

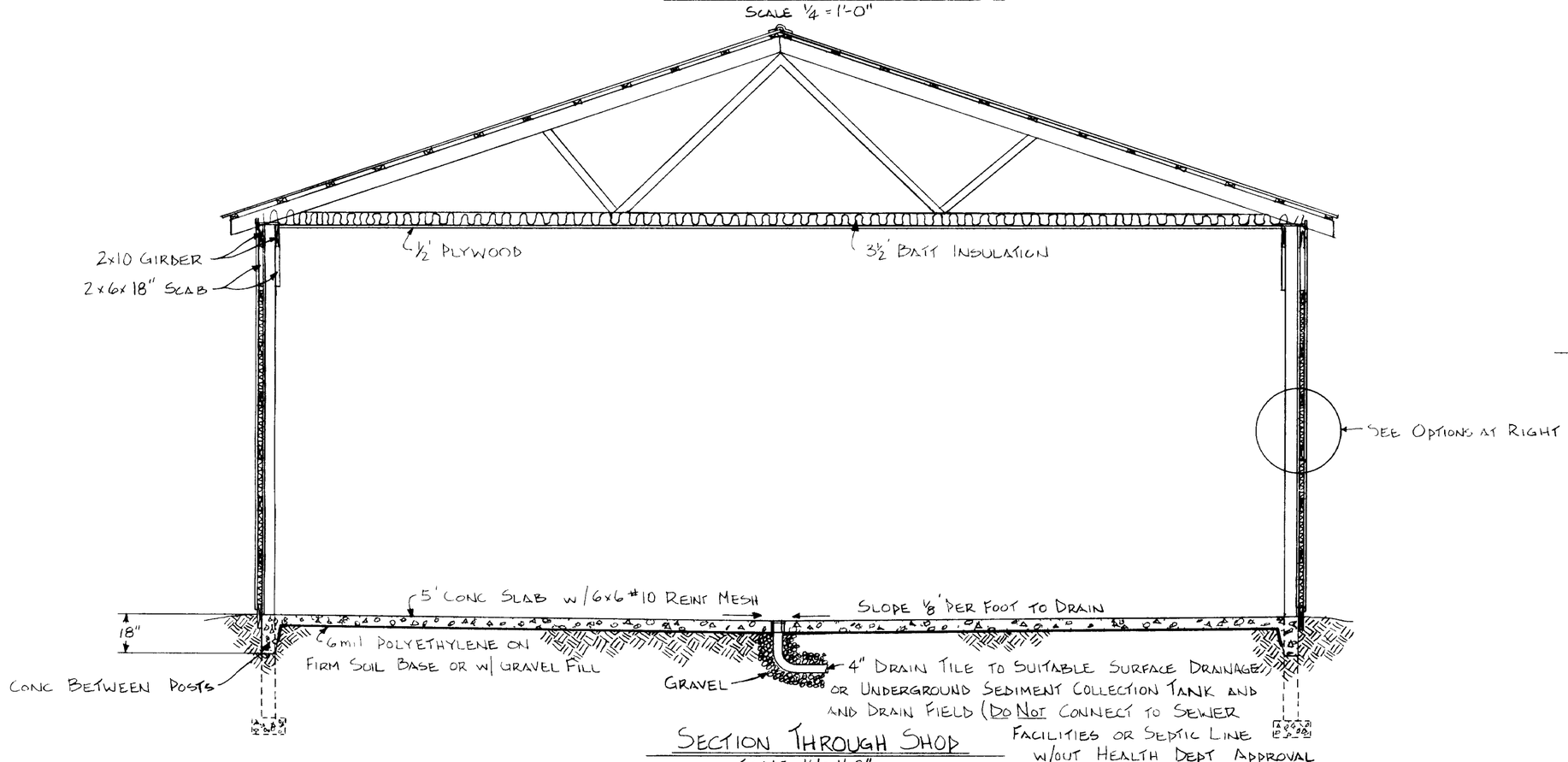

SECTION THROUGH SHOP

SCALE 1/4" = 1'-0"

COOPERATIVE EXTENSION WORK IN
AGRICULTURE AND HOME ECONOMICS
DEPARTMENT OF AGRICULTURAL ENGINEERING
COLLEGE OF AGRICULTURE
UNIVERSITY OF KENTUCKY &
U S DEPARTMENT OF AGRICULTURE COOPERATING

40' MACHINERY SHED, ONE SIDE OPEN
w/ 40'x32' WORK SHOP

Designed By G WHITE	Sheet 2 of 4
Checked By: G A DUNCAN	Plan Number
Drawn By G WHITE	KY. 11. 741-9
Date JULY, 1977	

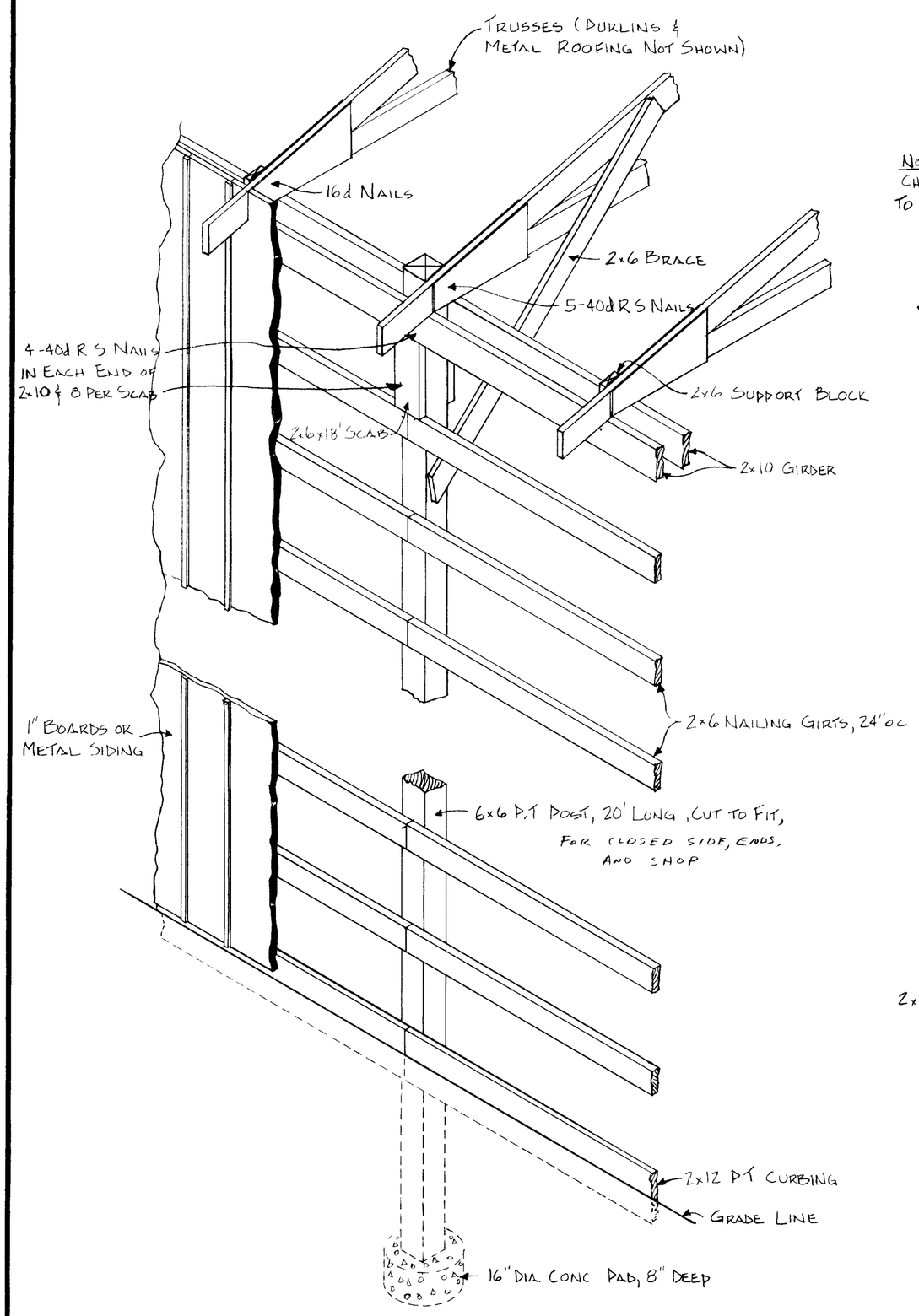

SIDE WALL CONSTRUCTION DETAIL

SCALE ½"=1'-0" (CLOSED SIDE OF SHED)

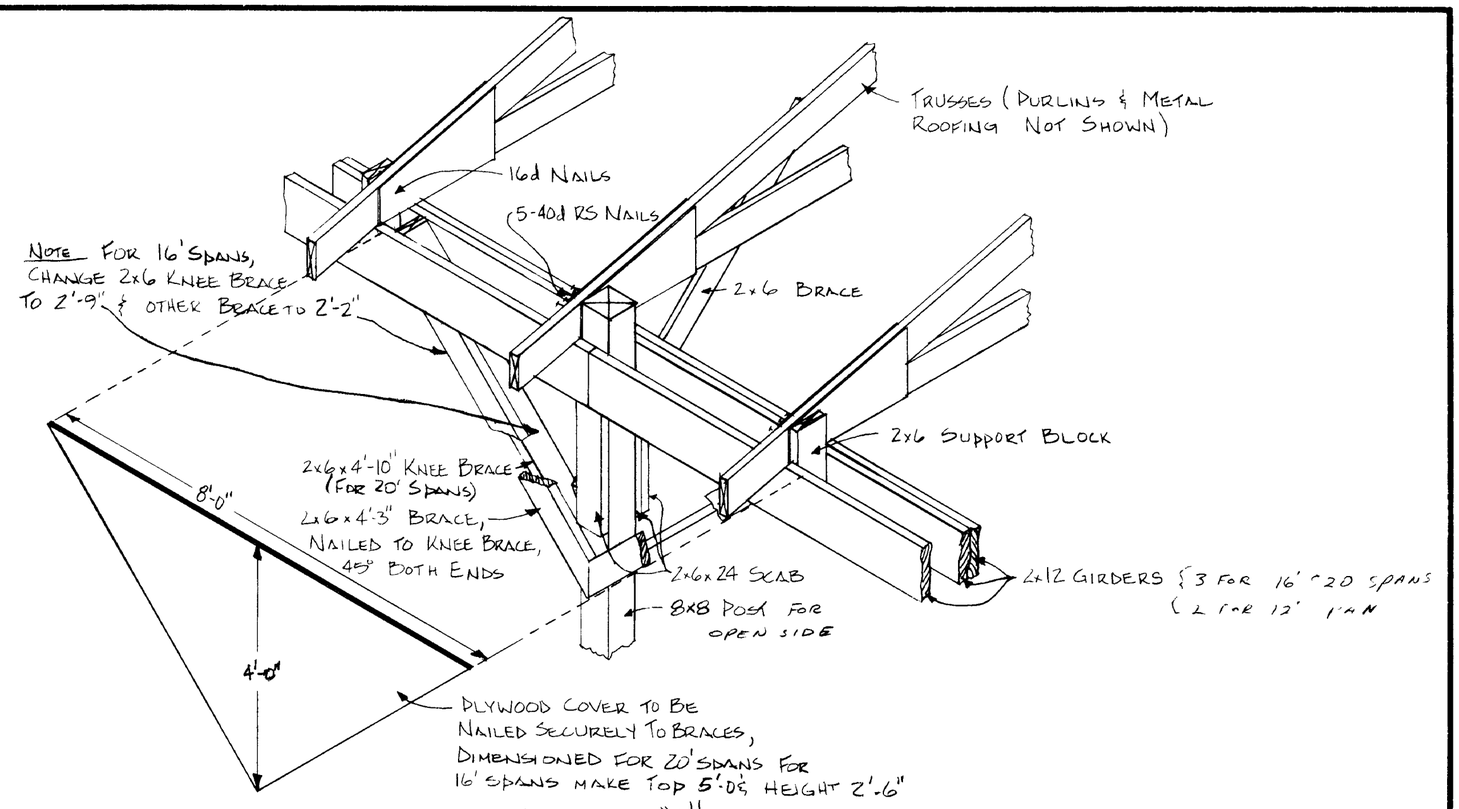

DETAIL "A"

SCALE ½"=1'-0"

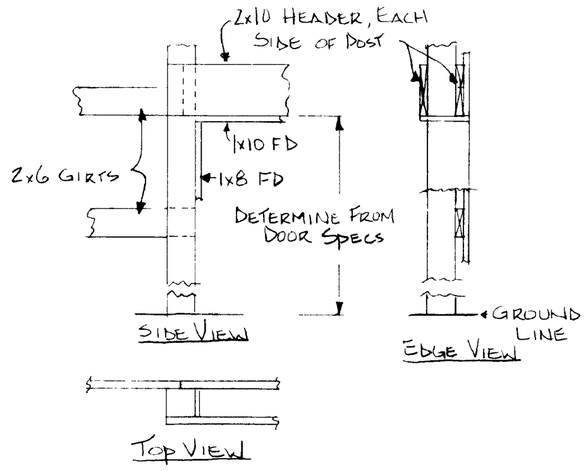

DETAIL OF FRAME FOR OVERHEAD DOOR

SCALE ½"=1'-0"

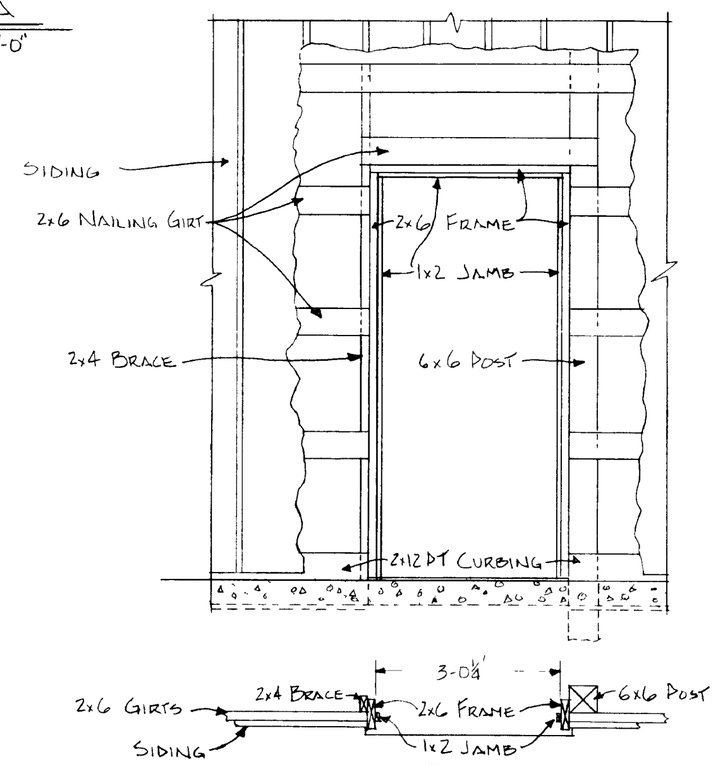

DOOR FRAME DETAIL

SCALE ½"=1'-0"

COOPERATIVE EXTENSION WORK IN
AGRICULTURE AND HOME ECONOMICS
DEPARTMENT OF AGRICULTURAL ENGINEERING
COLLEGE OF AGRICULTURE
UNIVERSITY OF KENTUCKY &
U S DEPARTMENT OF AGRICULTURE COOPERATING

40 MACHINERY SHED, ONE SIDE OPEN w/ 40'x32' WORK SHOP

Designed By G WHITE	Sheet 3 of 4
Checked By G A DUNCAN	Plan Number
Drawn By G WHITE	KY. 11. 741-9
Date JULY, 1977	

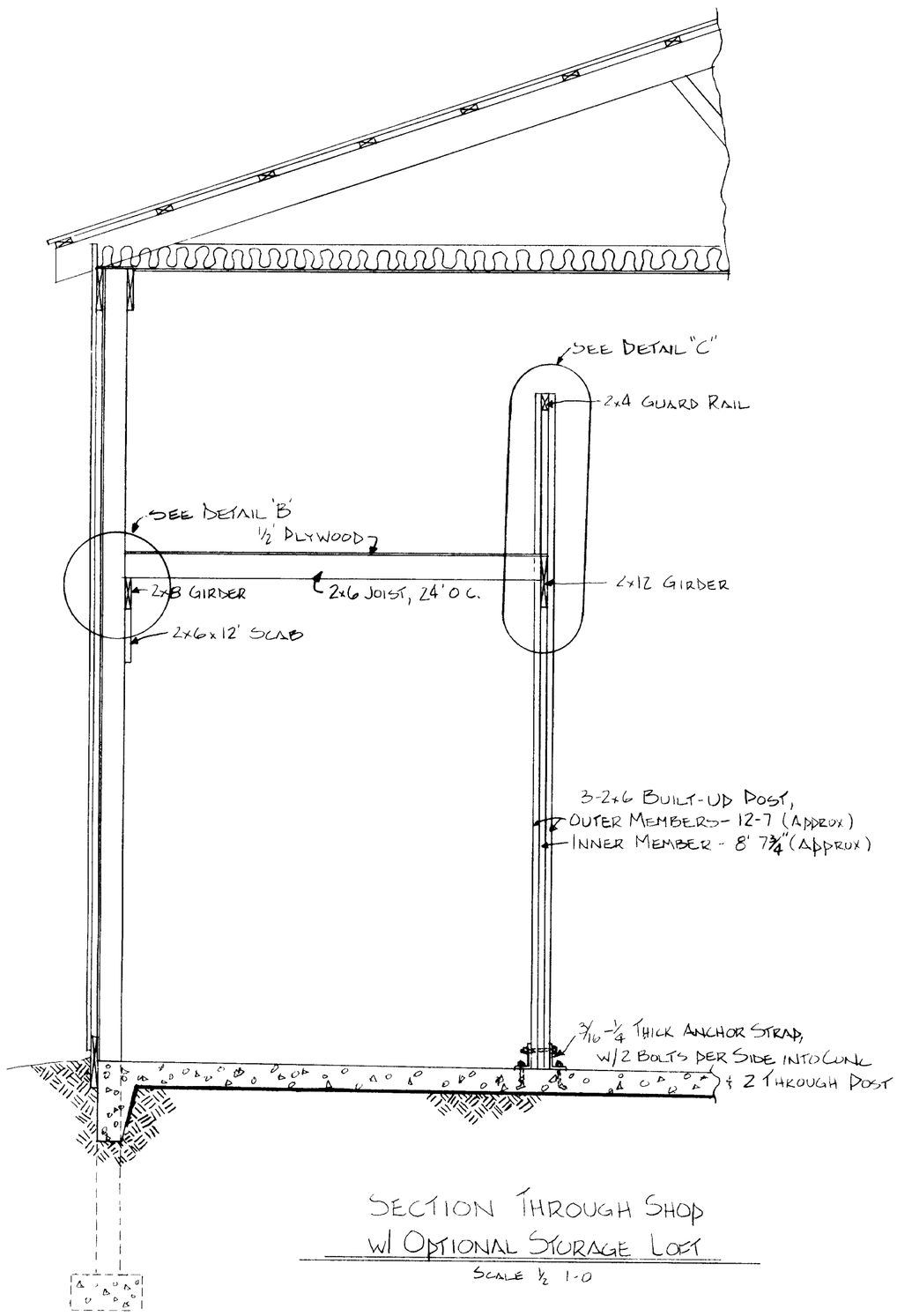

SECTION THROUGH SHOP
W/ OPTIONAL STORAGE LOFT
SCALE 1/2 1-0

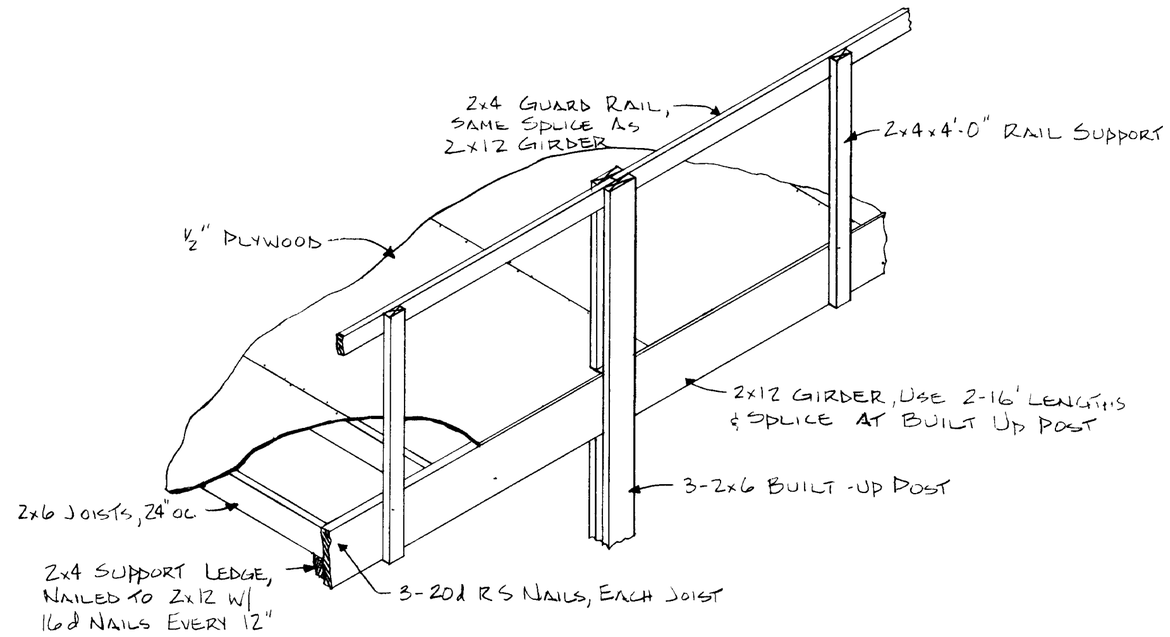

DETAIL "C"
SCALE 1/2 - 1'-0"

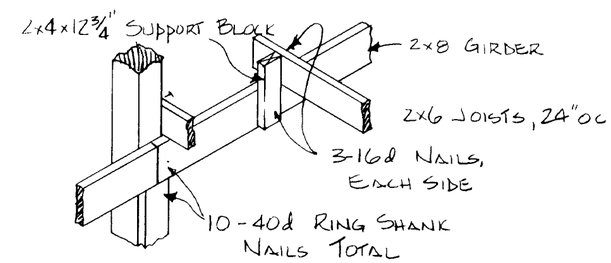

DETAIL "B"
SCALE 1/2 = 1-0"

COOPERATIVE EXTENSION WORK IN
AGRICULTURE AND HOME ECONOMICS
DEPARTMENT OF AGRICULTURAL ENGINEERING
COLLEGE OF AGRICULTURE
UNIVERSITY OF KENTUCKY &
U S DEPARTMENT OF AGRICULTURE COOPERATING

40' MACHINERY SHED, ONE SIDE OPEN
W/ 40'x32' WORK SHOP

Designed By G WHITE	Sheet 4 of 4
Checked By G A DUNCAN	Plan Number
Drawn By G WHITE	KY. 11. 741-9
Date JULY 1977	

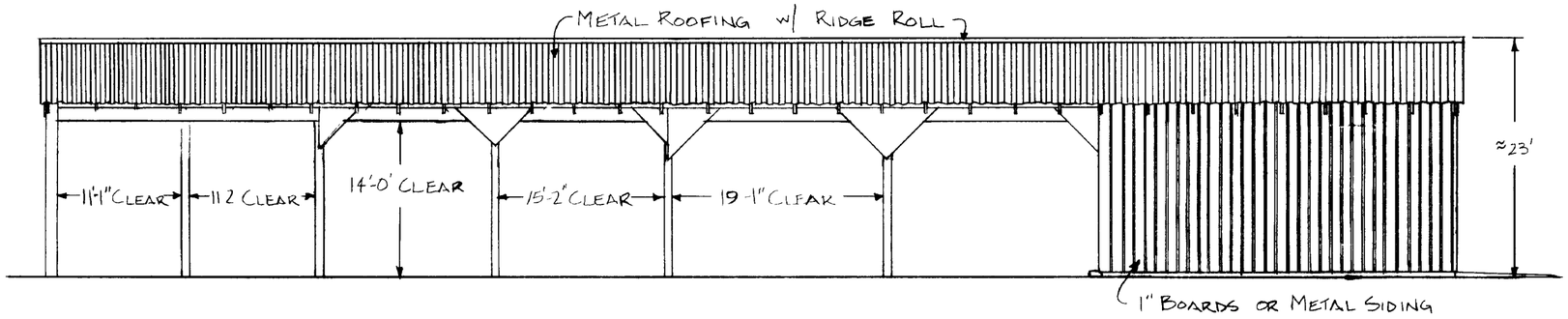

SIDE ELEVATION
SCALE 3/32 = 1'-0

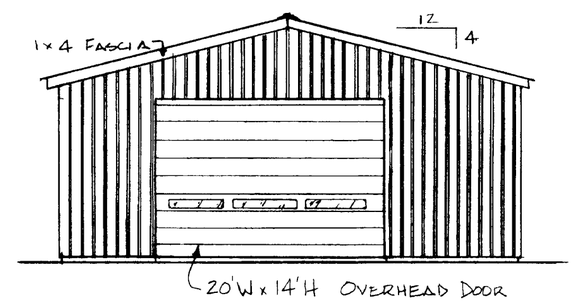

END ELEVATION
SCALE: 3/32 = 1'-0'

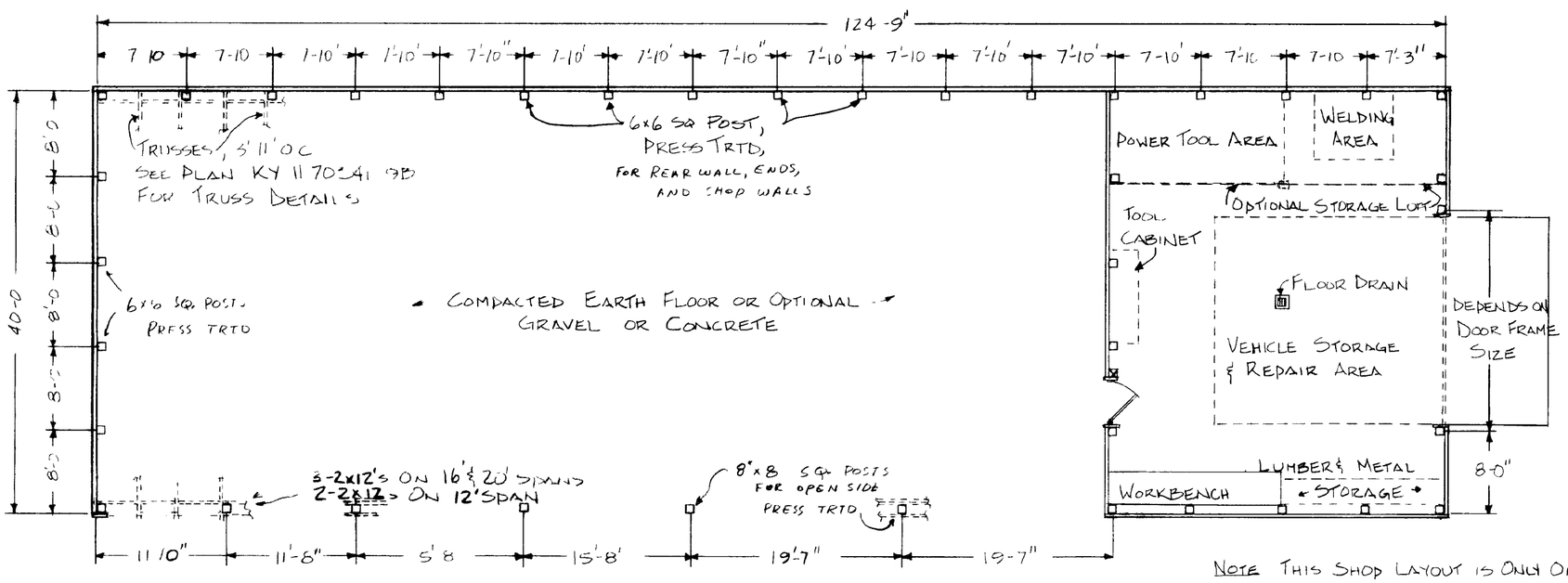

FLOOR PLAN
SCALE 3/32' = 1'-0"

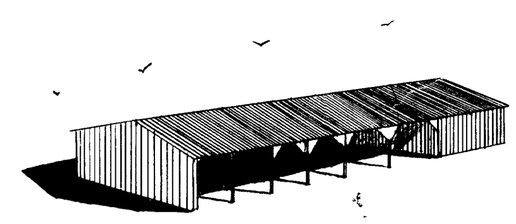

PERSPECTIVE VIEW
NO SCALE

NOTE THIS SHOP LAYOUT IS ONLY ONE SUGGESTION OPTIONAL LAYOUTS ARE LEFT TO OWNERS DISCRETION

"THESE PLANS ARE FOR USE AS A CONSTRUCTION GUIDE IF A CONSTRUCTION CONTRACT IS TO BE MADE, WRITTEN SPECIFICATIONS ARE NEEDED."

COOPERATIVE EXTENSION WORK IN
AGRICULTURE AND HOME ECONOMICS
DEPARTMENT OF AGRICULTURAL ENGINEERING
COLLEGE OF AGRICULTURE
UNIVERSITY OF KENTUCKY &
U S DEPARTMENT OF AGRICULTURE COOPERATING

40' MACHINERY SHED, ONE SIDE OPEN
w/ 40 x 52 WORK SHOP

Designed By G WHITE	Sheet 1 of 4
Checked By: G A DUNCAN	Plan Number
Drawn By G WHITE	KY. 11. 741-9
Date JULY, 1977	