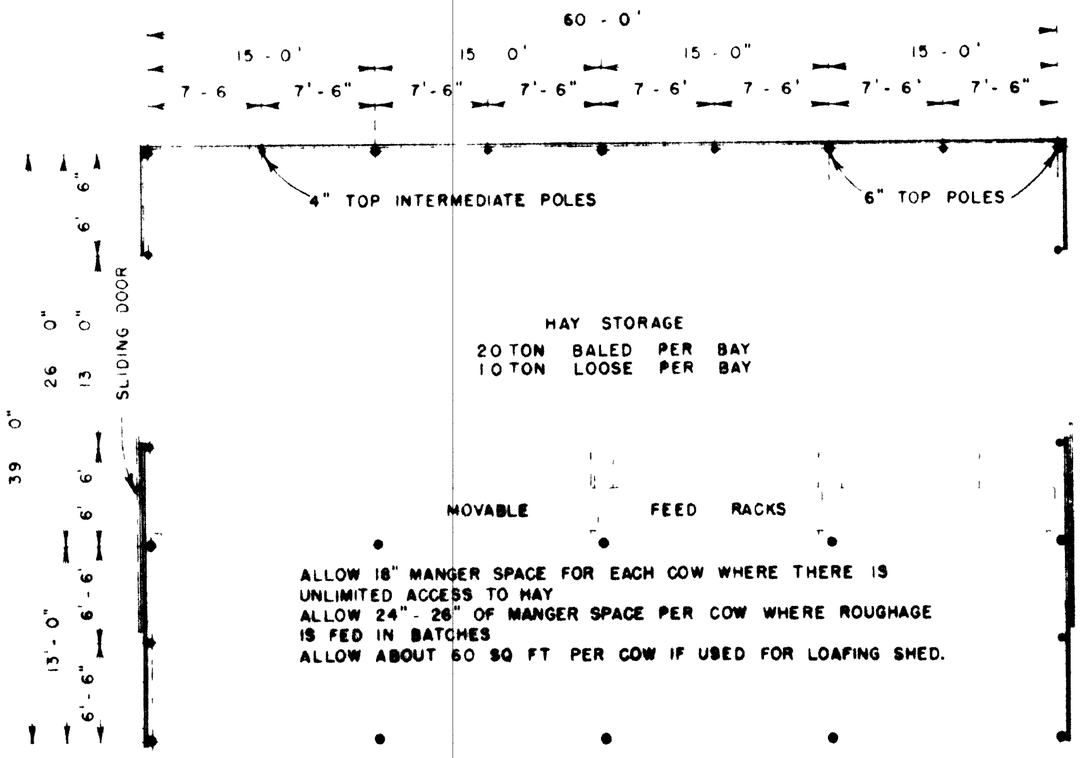

FLOOR PLAN
SCALE 1/8" = 1'-0"

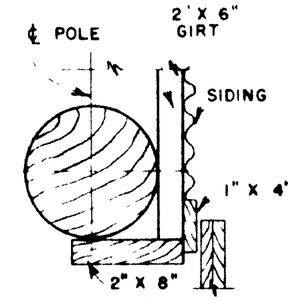

JAMB

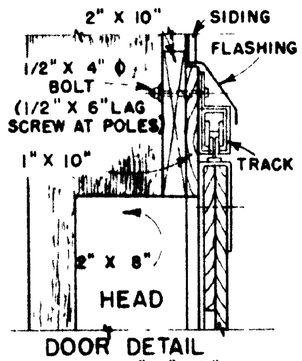

DOOR DETAIL
SCALE 1 1/2" = 1'- 0"

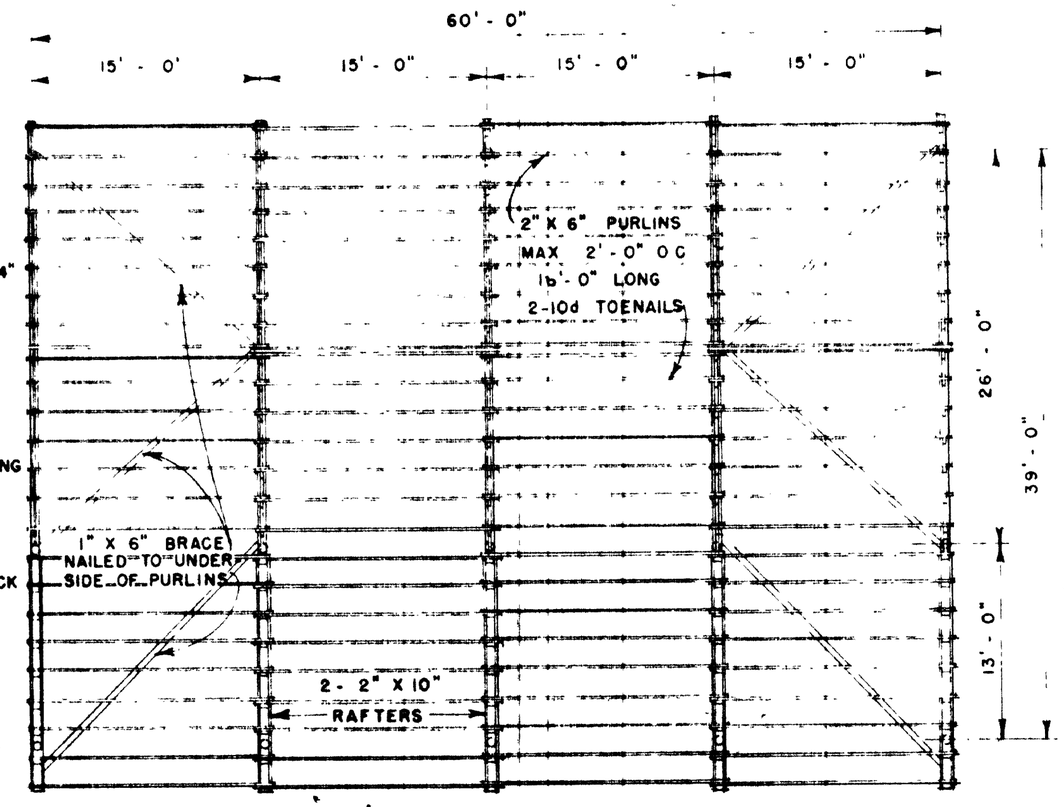

ROOF FRAMING PLAN
SCALE: 1/8" = 1'- 0"

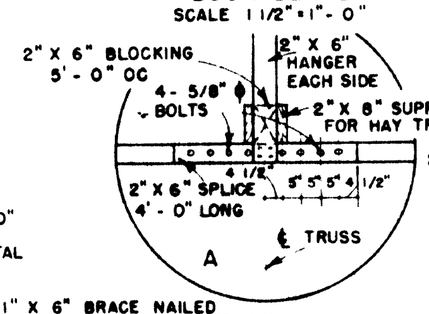

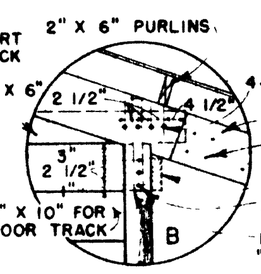

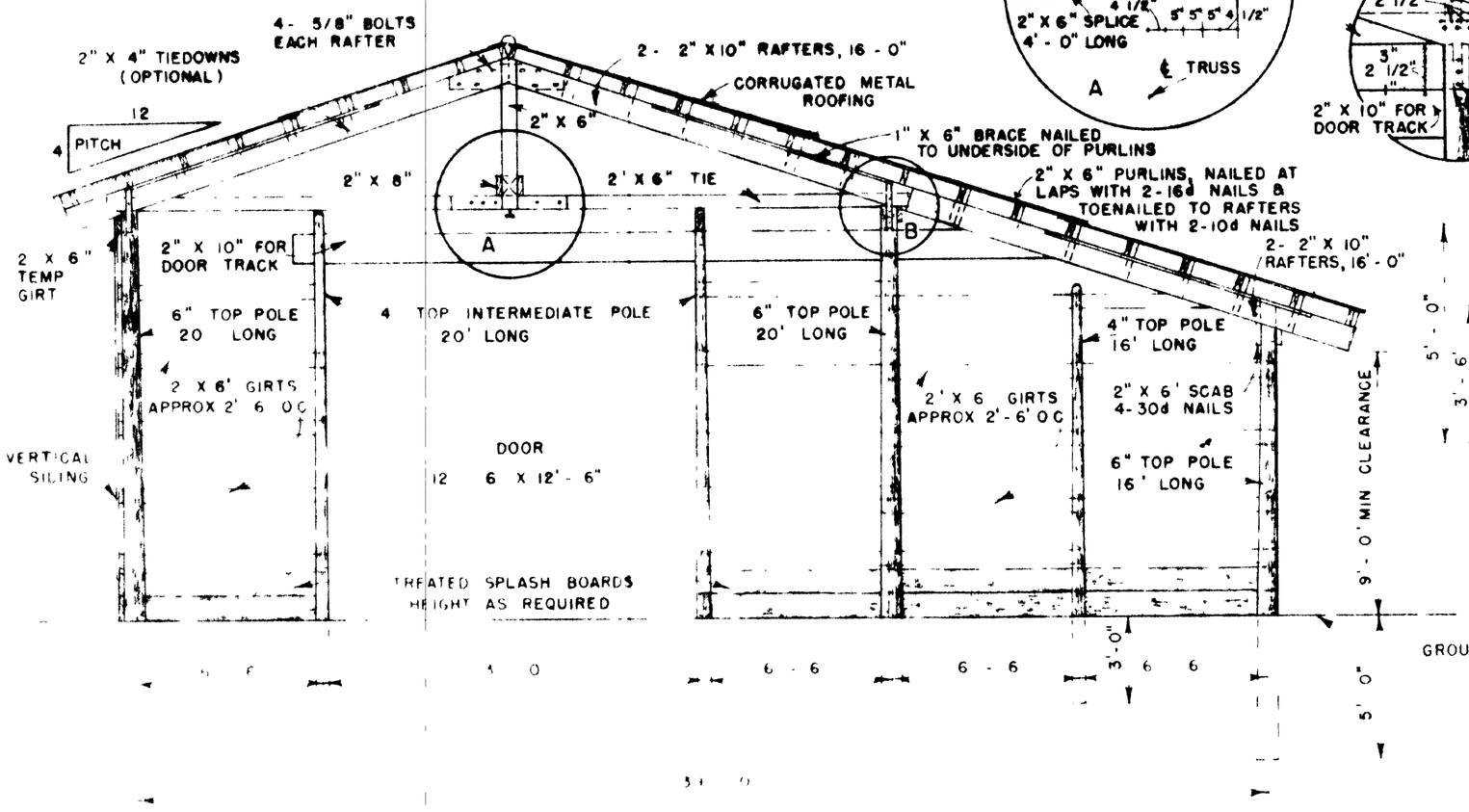

CROSS SECTION SHOWING END WALL FRAMING
SCALE 1/4" = 1' 0

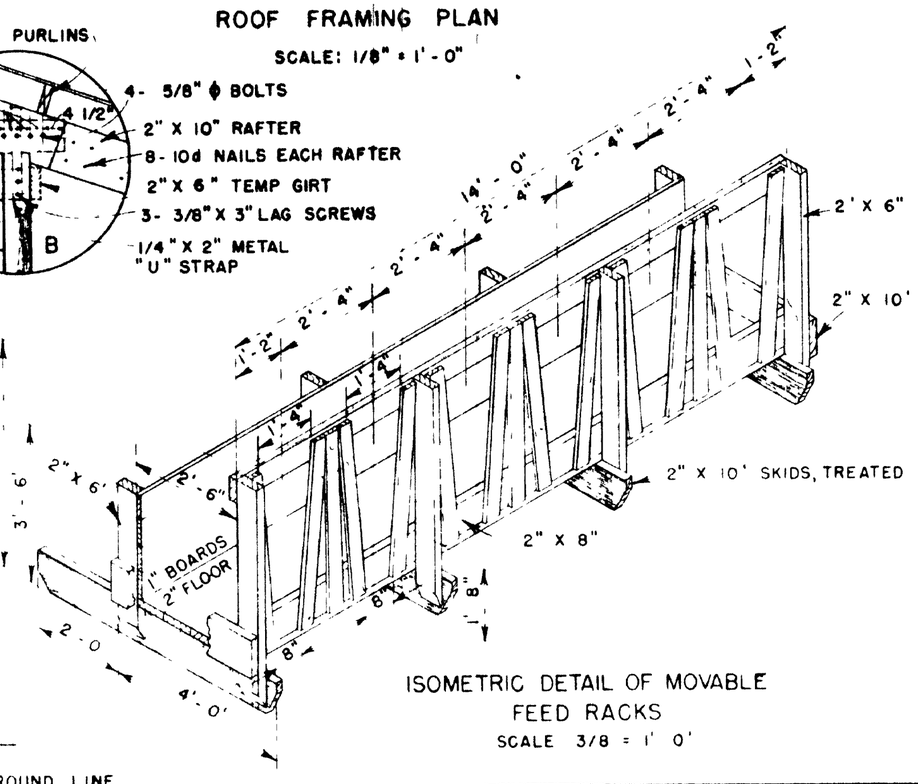

ISOMETRIC DETAIL OF MOVABLE FEED RACKS
SCALE 3/8 = 1' 0'

NOTE

IF IN THE FUTURE THIS BARN IS TO BE WIDENED TO 52' AS SHOWN ON SHEET 3, USE LONGER POLES AS SHOWN ON SHEET 3

COOPERATIVE EXTENSION WORK IN
AGRICULTURE AND HOME ECONOMICS
COLLEGE OF AGRICULTURE
UNIVERSITY OF KENTUCKY, LEXINGTON
AND
UNITED STATES DEPARTMENT OF AGRICULTURE COOPERATING

POLE BARN (TRUSSED ROOF)
39' WIDE

USDA '54	EX 5782	SHEET 2 OF 3

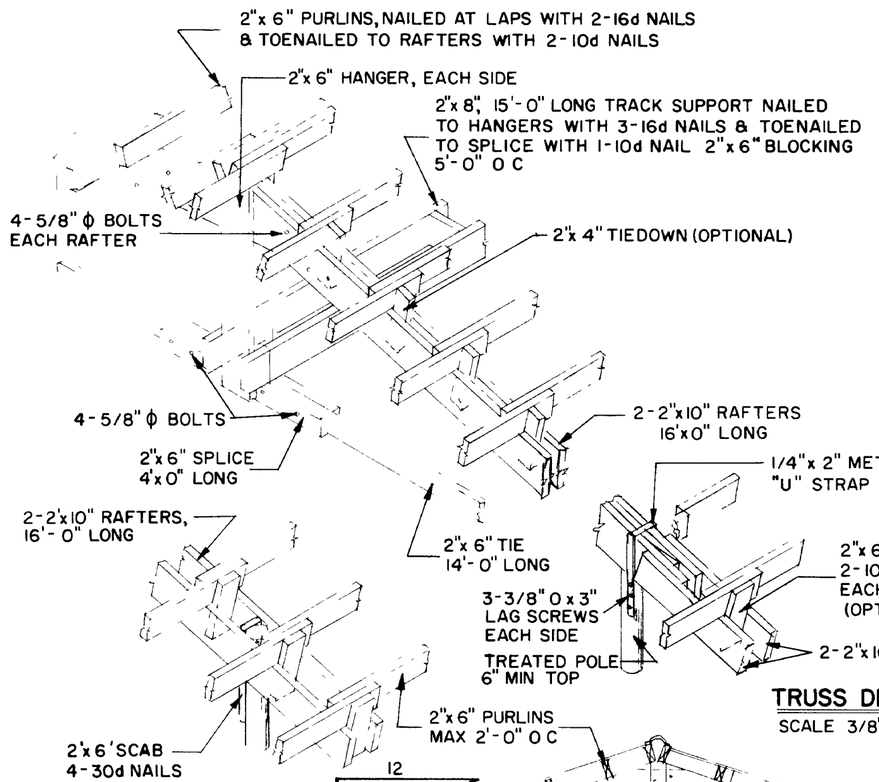

EAVE DETAIL
SCALE 3/8"=1'-0"

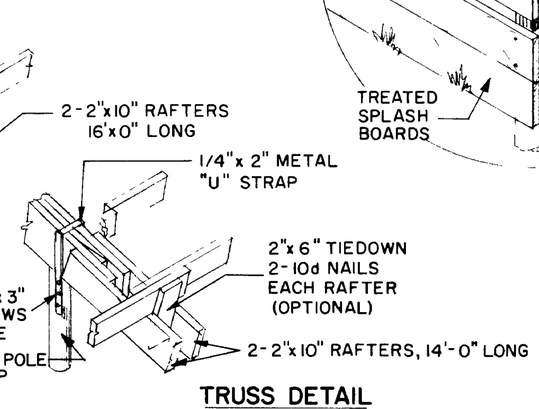

TRUSS DETAIL
SCALE 3/8"=1'-0"

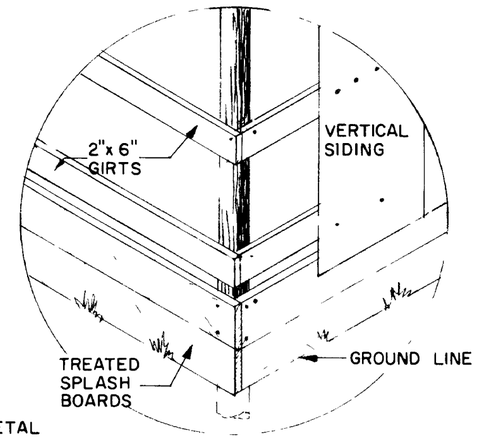

CORNER DETAIL
SCALE 1/2"=1'-0"

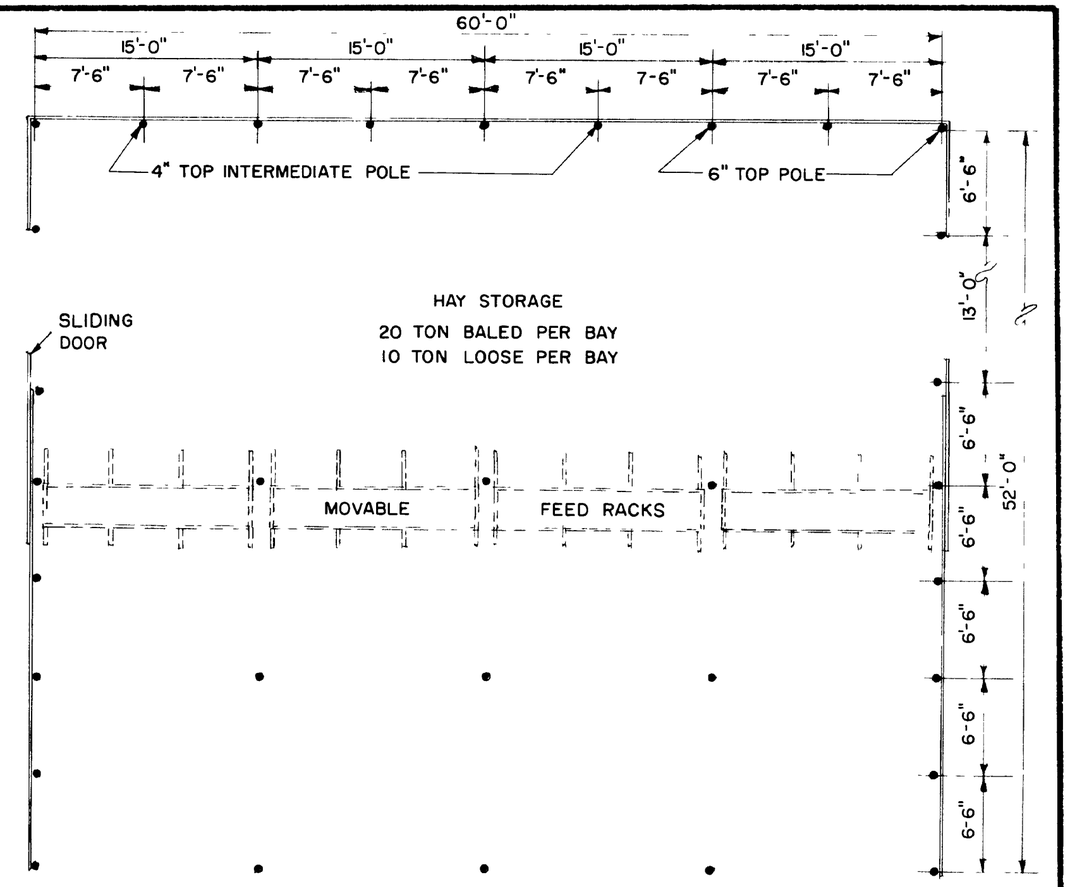

FLOOR PLAN
SCALE 1/8"=1'-0"

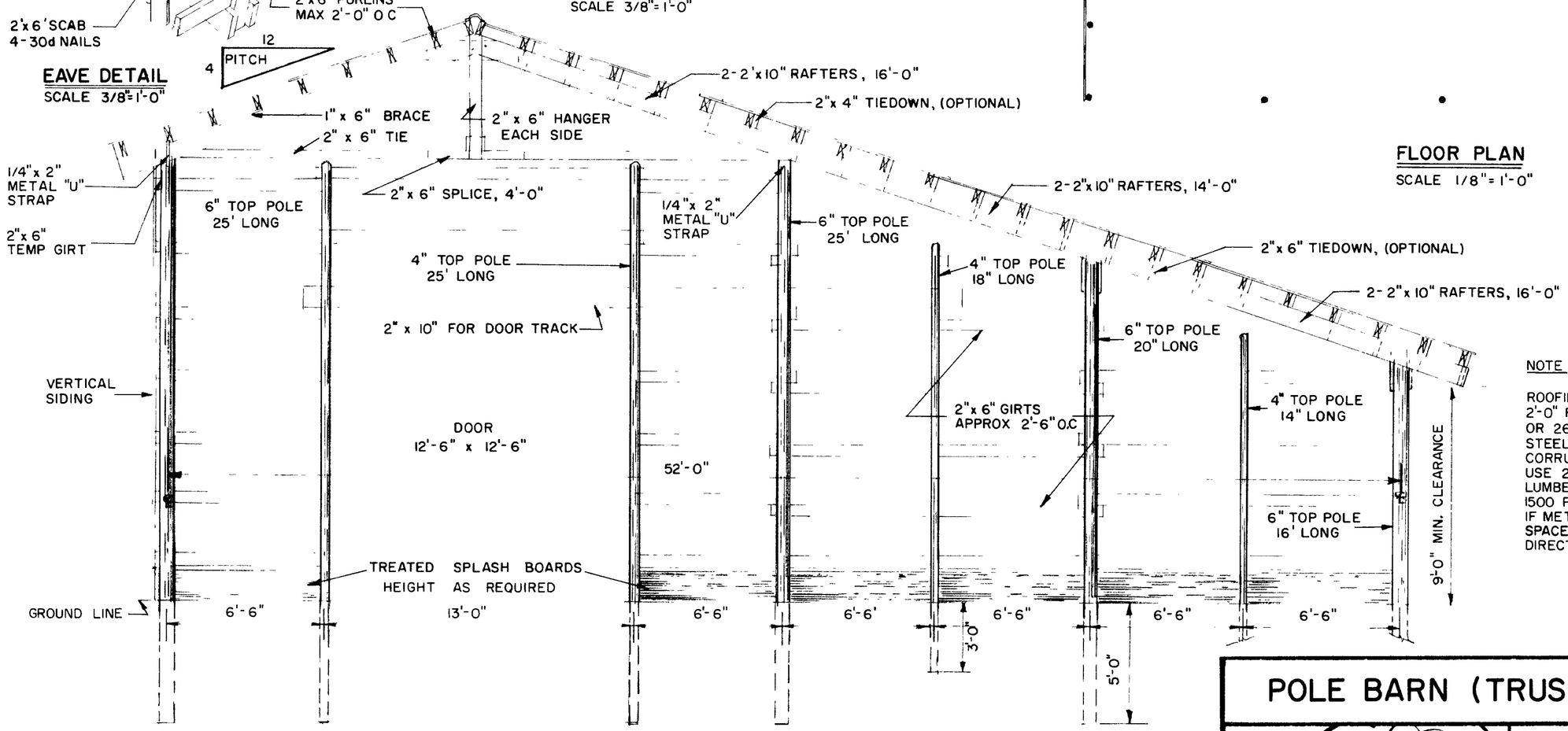

CROSS SECTION SHOWING END WALL FRAMING
SCALE 1/4"-1'0"

NOTE

ROOFING - PURLIN SPACING NOT TO EXCEED 2'-0" FOR 024" 2 1/2" CORRUGATED ALUM OR 26 GA 2 1/2" CORRUGATED GALVANIZED STEEL SIDE LAP SHEETS AT LEAST 1 1/2" CORRUGATIONS END LAPS 6" MIN
USE 2 1/2" CORRUGATED RIDGE ROLL
LUMBER NOMINAL, ALLOWABLE FIBER STRESS = 1500 PSI FOR PURLINS, 1200 PSI FOR RAFTERS
IF METAL SIDING IS USED, NAILING GIRTS TO BE SPACED TO CONFORM TO MANUFACTURERS DIRECTIONS

POLE BARN (TRUSSED ROOF) 52' WIDE

COOPERATIVE EXTENSION SERVICE
AGRICULTURE AND HOME ECONOMICS
DEPARTMENT OF AGRICULTURAL ENGINEERING
COLLEGE OF AGRICULTURE
UNIVERSITY OF KENTUCKY
AND
U S DEPARTMENT OF AGRICULTURE COOPERATING

DESIGNED BY	SHEET 3 OF 3
CHECKED BY	PLAN NUMBER
DRAWN BY J.W.	5782
DATE 6/26/84	
REVISIONS	

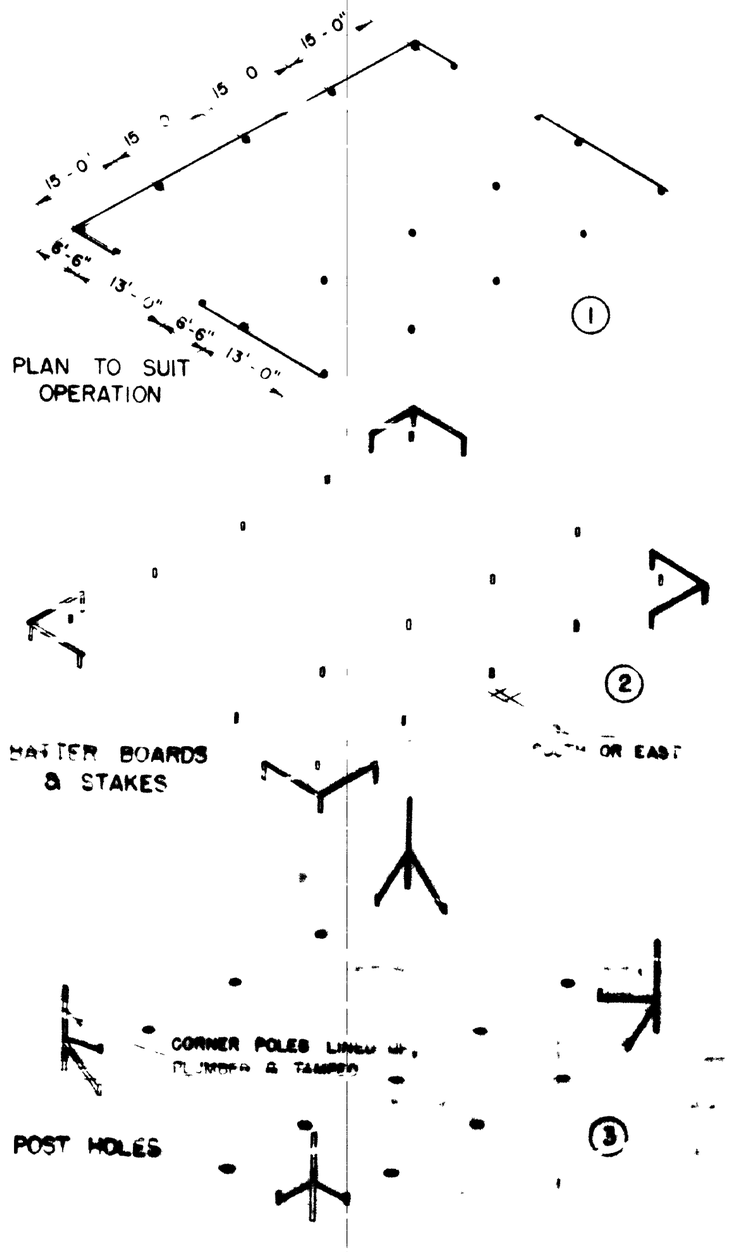

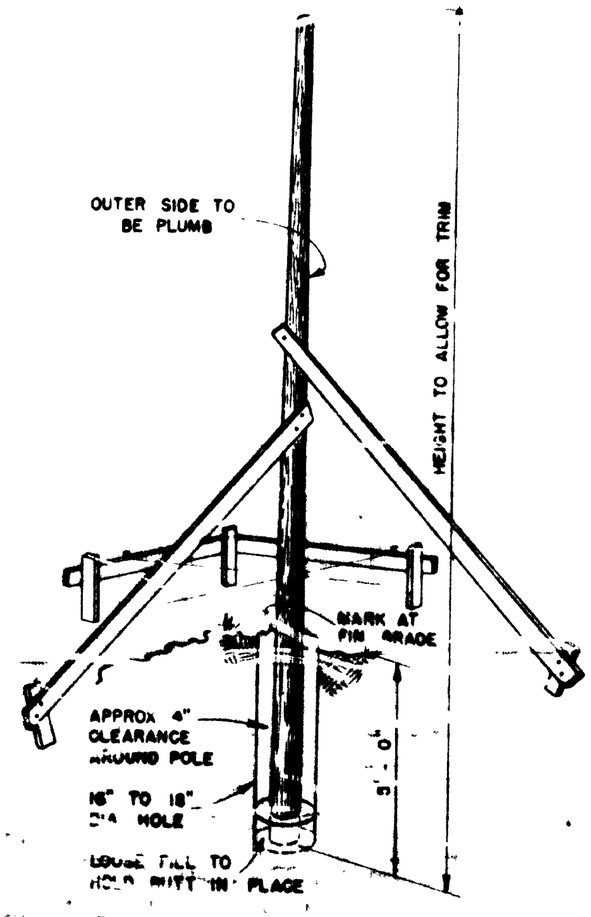

POST HOLE & BRACED POLE

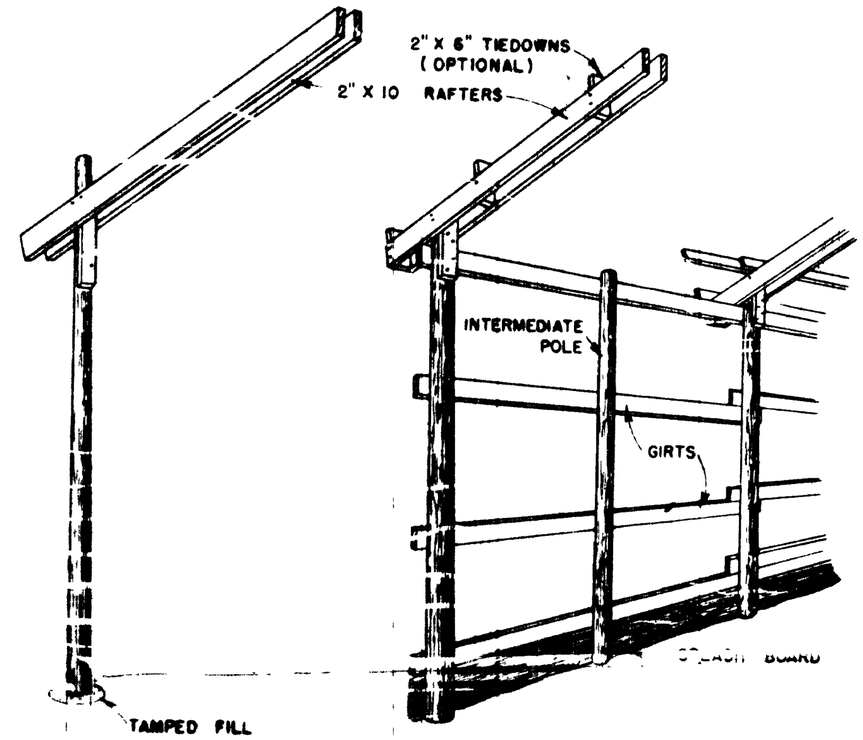

POLE & RAFTERS

POLES, RAFTERS, PURLINS & GIRTS

NOTE

ALL POLES & SPLASH BOARDS TO BE PRESSURE-TREATED WITH PRESERVATIVE

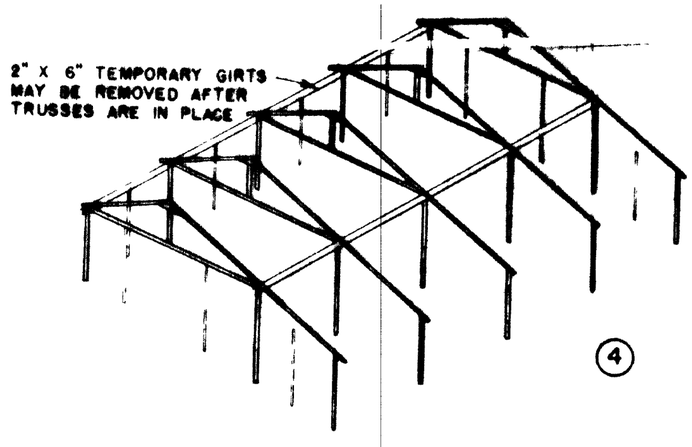

ERECTION OF BALANCE OF POLES & RAFTERS

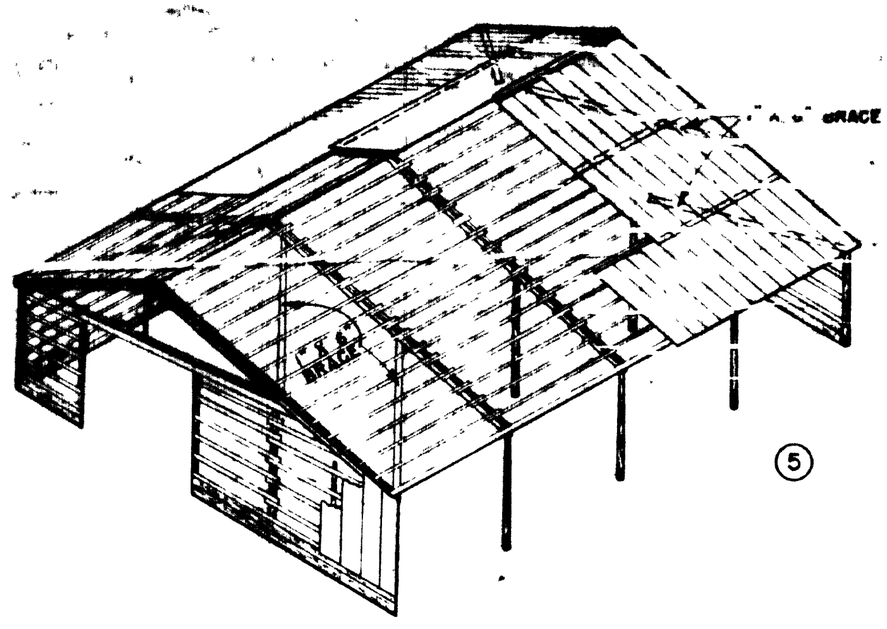

PURLINS, GIRTS, ROOFING & SIDING

NOTE

THIS BUILDING IS DESIGNED FOR AREAS OF THE SOUTHERN UNITED STATES WHERE THE SNOW LOAD DOES NOT EXCEED 10# PER SQ. FT & WIND DOES NOT EXCEED 88 MI PER HOUR
IN A FEW AREAS, SUCH AS NORTHERN VIRGINIA & WESTERN KENTUCKY WHERE SNOW LOADS EXCEED 10# PER SQ FT., 2" X 12" RAFTERS SHOULD BE USED INSTEAD OF THE 2" X 10" RAFTERS SHOWN & PURLINS SHOULD BE SPACED 16" O.C. INCREASE NUMBER OF 30d NAILS IN RAFTER TO POLE CONNECTIONS 50%
IT SHOULD NOT BE USED IN OTHER AREAS WITHOUT REDESIGNING FRAMING TO MEET LOCAL CONDITIONS

NOTE

THIS BUILDING MAY BE BUILT IN ANY LENGTH DESIRED IN UNITS OF 15'-0"

COOPERATIVE EXTENSION WORK IN
AGRICULTURE AND HOME ECONOMICS
COLLEGE OF AGRICULTURE
UNIVERSITY OF KENTUCKY, LEXINGTON
AND
UNITED STATES DEPARTMENT OF AGRICULTURE COOPERATING

POLE BARN (TRUSSED ROOF)
39' WIDE

USDA '54	EX 5782	SHEET 1 OF 3