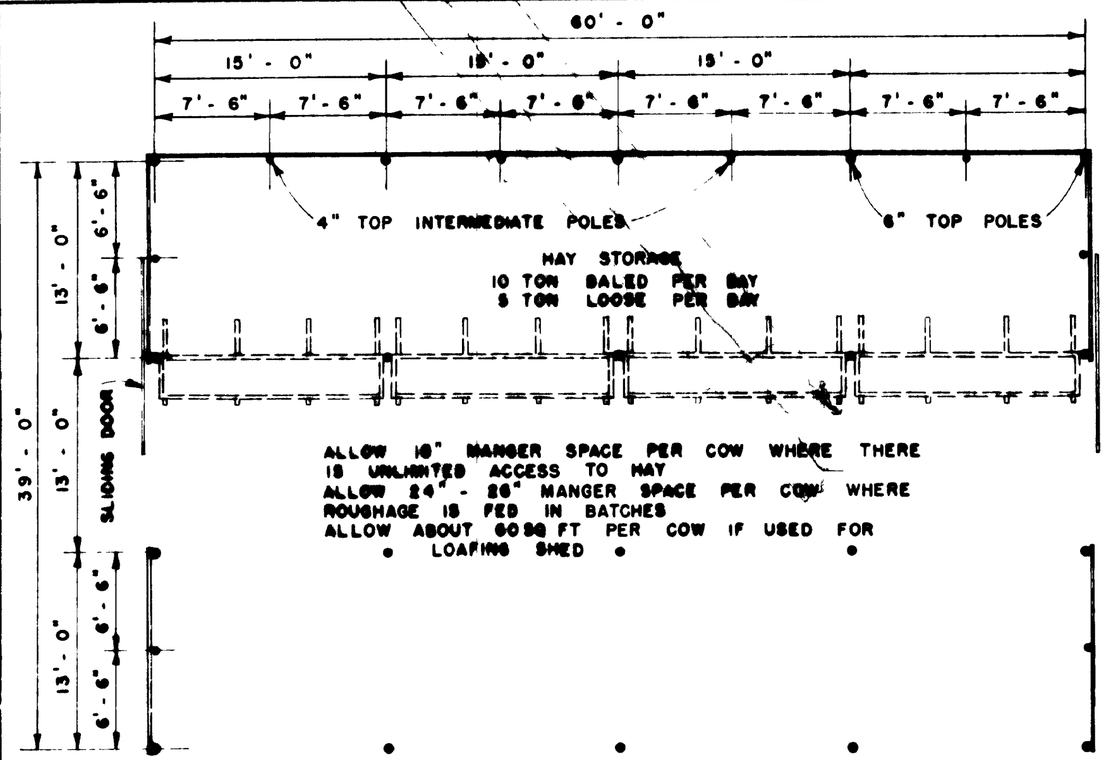


FLOOR PLAN
SCALE: 1/8" = 1'-0"

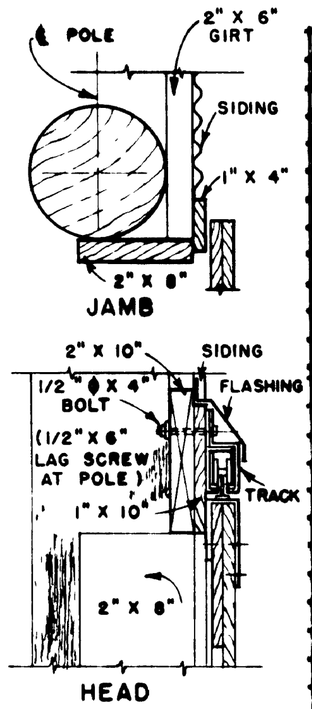


DOOR DETAIL
SCALE 1 1/2" = 1'-0"

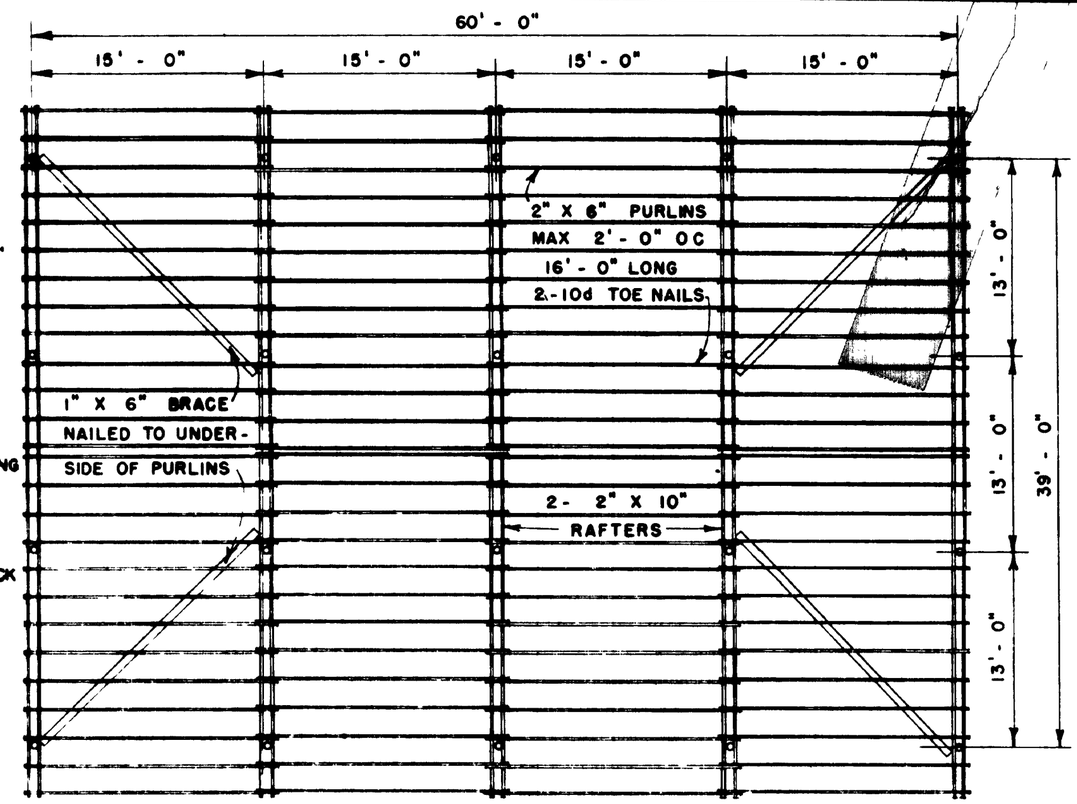


ROOF FRAMING PLAN
SCALE 1/8" = 1'-0"

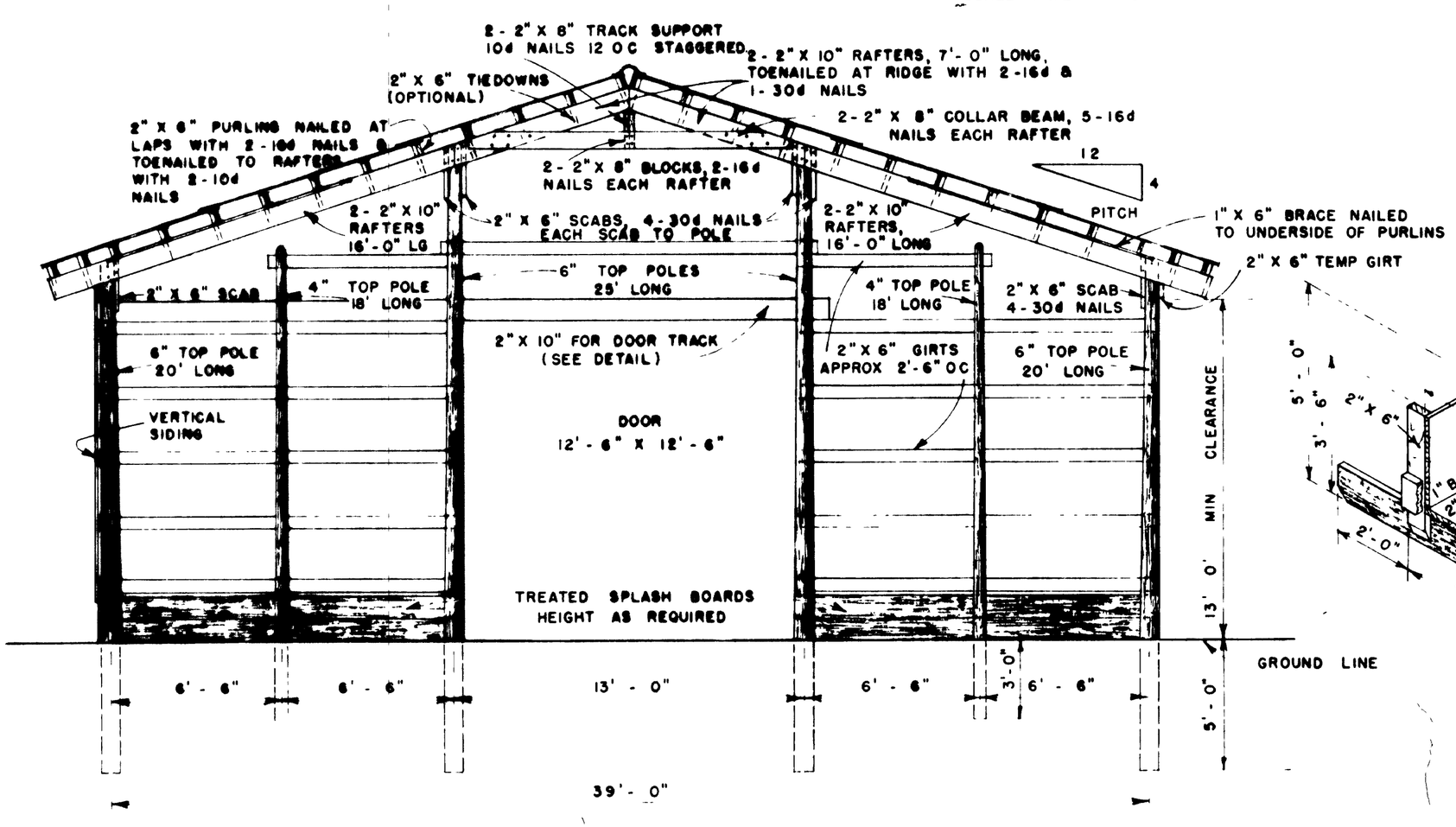


CROSS SECTION SHOWING END WALL FRAMING
SCALE 1/4" = 1'-0"

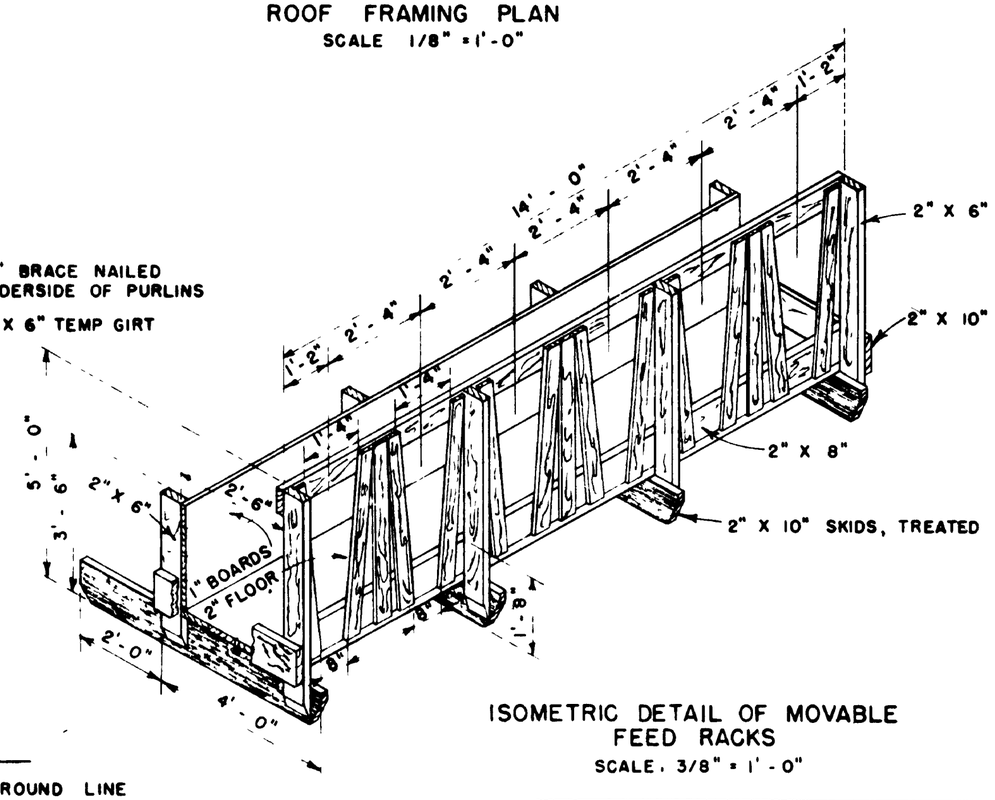


ISOMETRIC DETAIL OF MOVABLE FEED RACKS
SCALE. 3/8" = 1' - 0"

COOPERATIVE EXTENSION WORK IN
AGRICULTURE AND HOME ECONOMICS
DEPARTMENT OF AGRICULTURAL ENGINEERING
UNIVERSITY OF KENTUCKY
AND
UNITED STATES DEPARTMENT OF AGRICULTURE COOPERATING

POLE BARN

| USDA '54 | EX 5780 | SHEET 2 OF 3 |
|---|---|---|

REV. AUG 1972

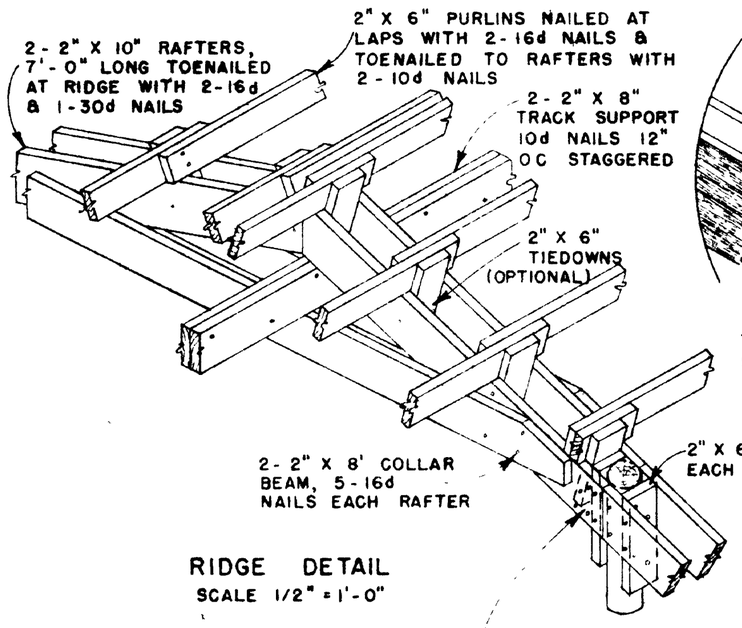


RIDGE DETAIL
SCALE 1/2" = 1'-0"

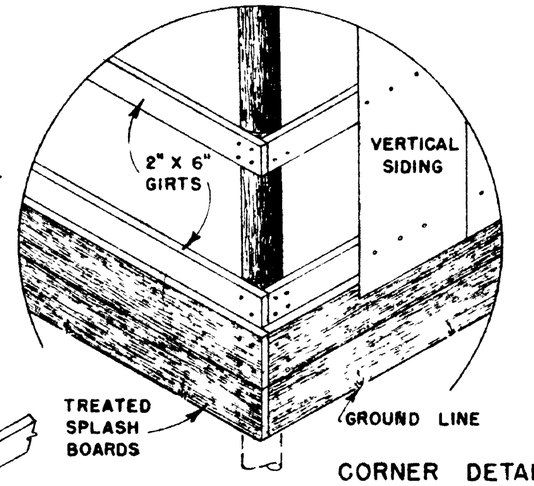


CORNER DETAIL
SCALE. 1/2" = 1'-0"

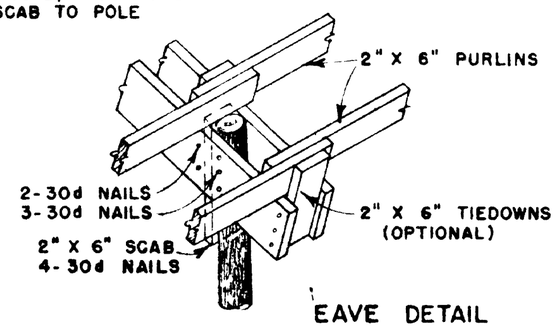


EAVE DETAIL
SCALE 1/2" = 1'-0"

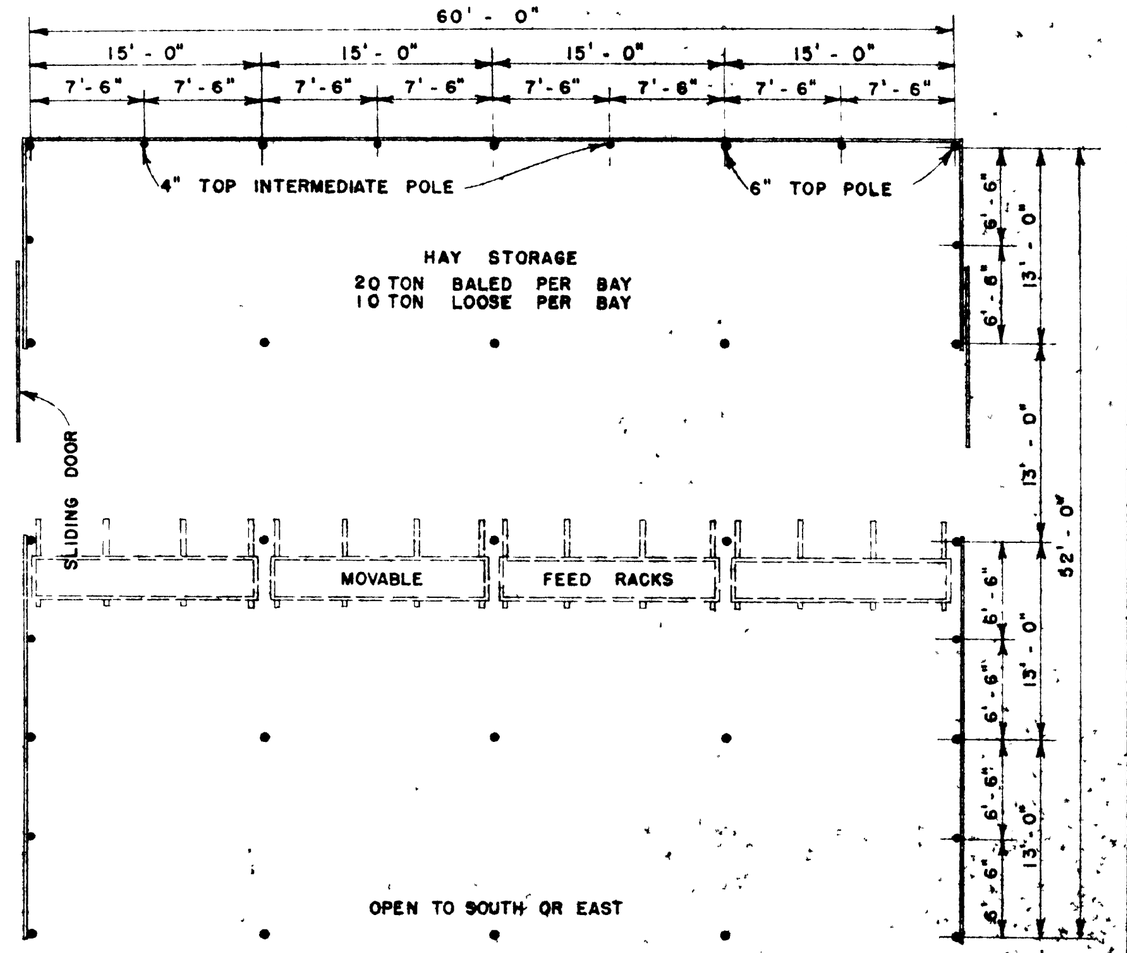


FLOOR PLAN
SCALE: 1/8" = 1' - 0"

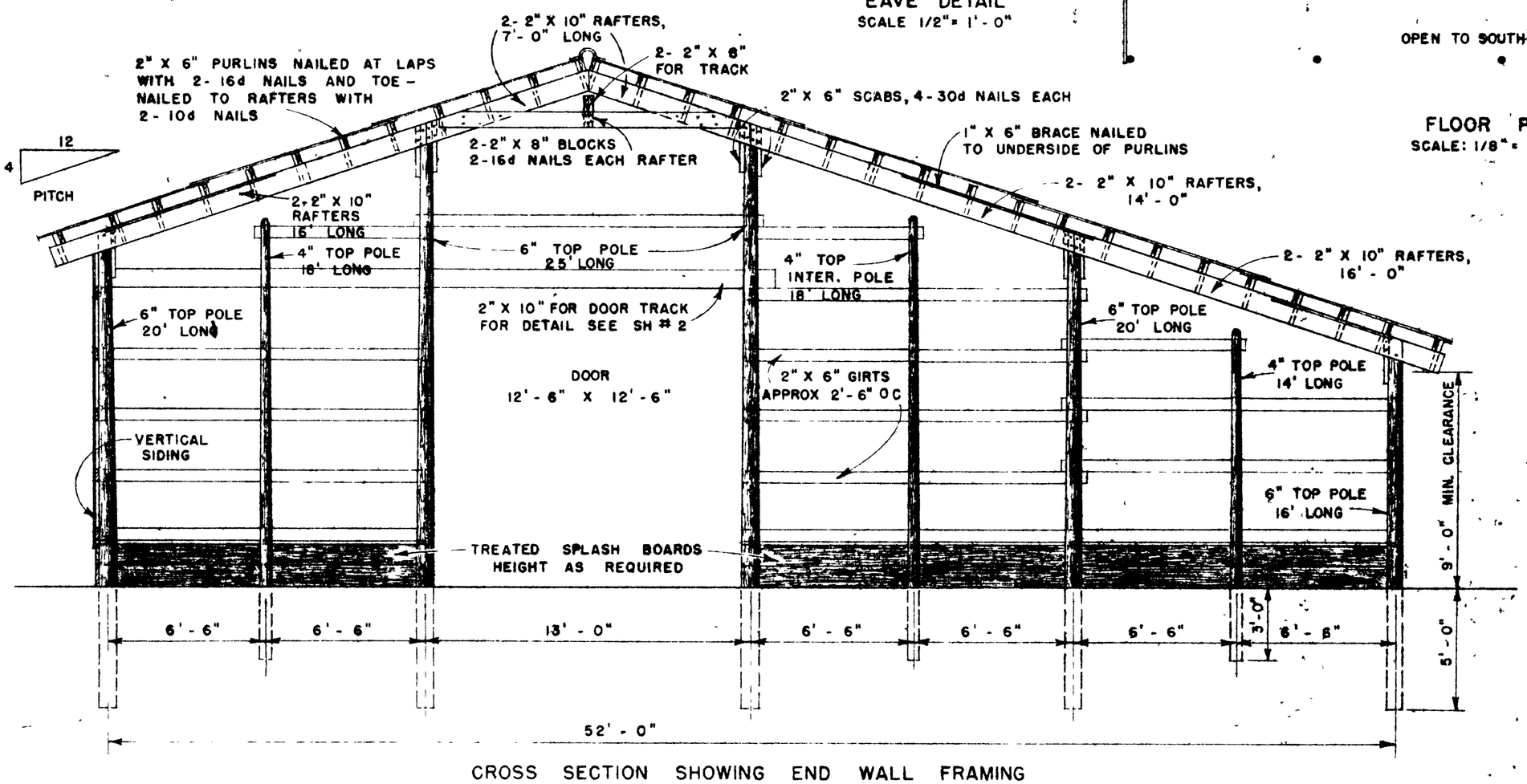


CROSS SECTION SHOWING END WALL FRAMING
SCALE 1/4" = 1' - 0"

NOTE:

ROOFING, PURLIN SPACING NOT TO EXCEED 2' - 0" FOR .024", 2 1/2" CORRUGATED ALUM. OR 26 GA. 2 1/2" CORRUGATED GALVANIZED STEEL SIDE LAP SHEETS AT LEAST 1 1/2" CORRUGATIONS END LAPS 6" MIN.
USE 2 1/2" CORRUGATED RIDGE ROLL
LUMBER NOMINAL, ALLOWABLE FIBER STRESS:
1500 PSI FOR PURLINS,
1200 PSI FOR RAFTERS
IF METAL SIDING IS USED, NAILING GIRTS TO BE SPACED TO CONFORM TO MANUFACTURERS DIRECTIONS.

COOPERATIVE EXTENSION WORK IN
AGRICULTURE AND HOME ECONOMICS
DEPARTMENT OF AGRICULTURAL ENGINEERING
UNIVERSITY OF KENTUCKY
AND
UNITED STATES DEPARTMENT OF AGRICULTURE COOPERATING

POLE BARN

| USDA '54 | EX 5780 | SHEET 3 OF 3 |
|---|---|---|

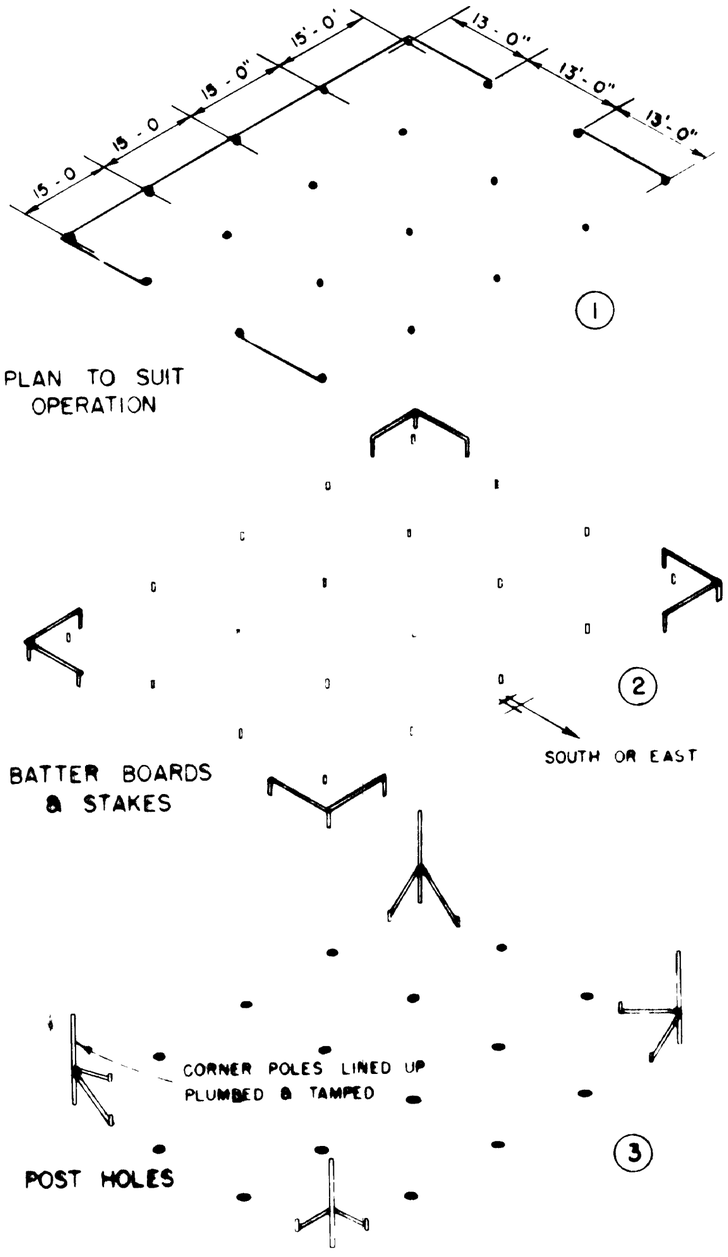


PLAN TO SUIT OPERATION

BATTER BOARDS & STAKES

POST HOLES

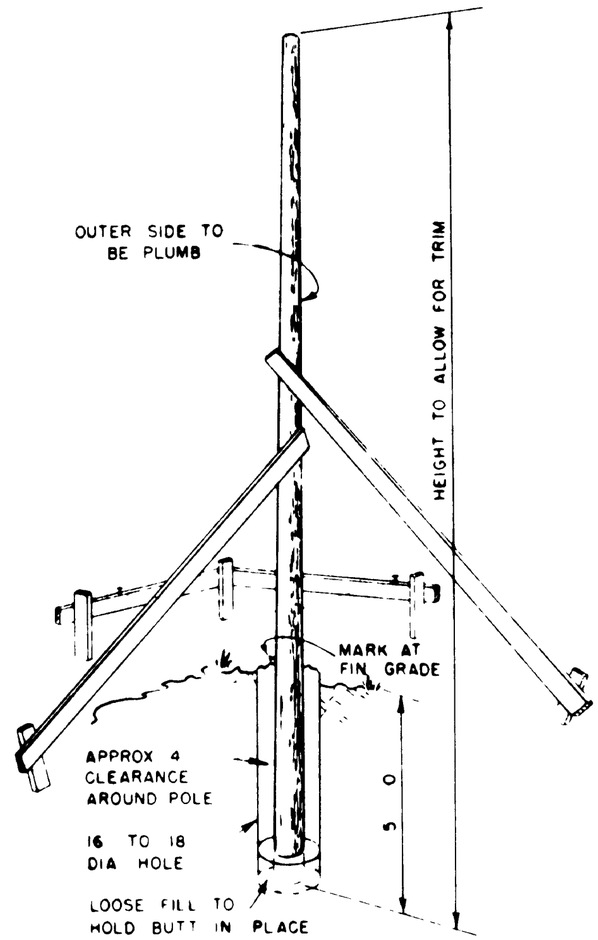


POST HOLE & BRACED POLE

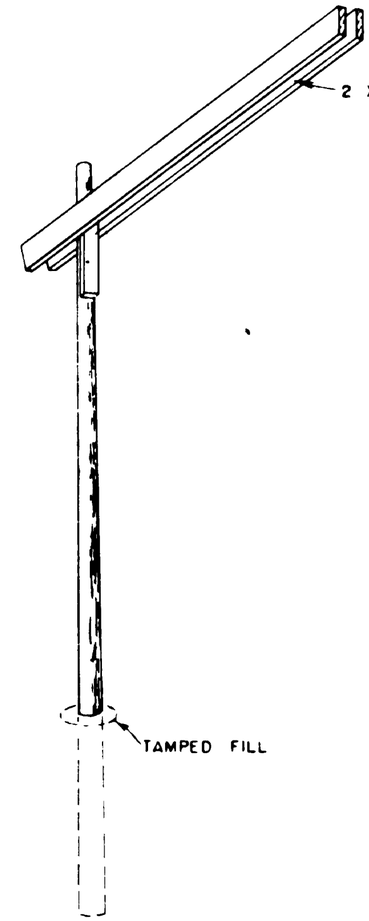


POLE & RAFTERS

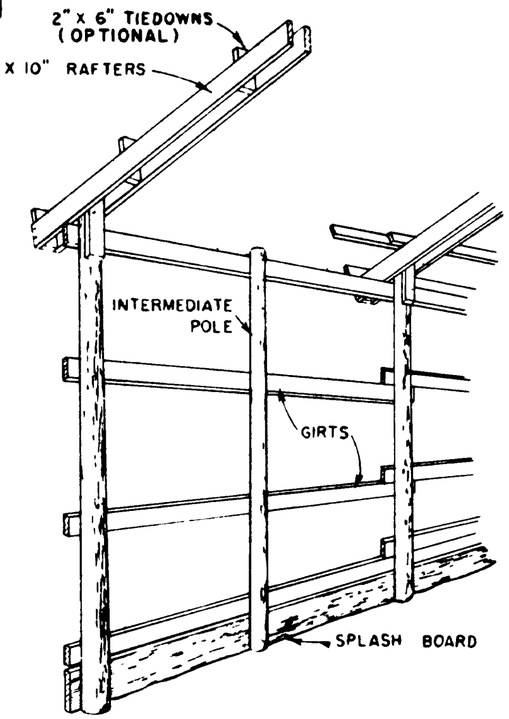


POLES, RAFTERS, PURLINS & GIRTS

NOTE

ALL POLES & SPLASH BOARDS TO BE PRESSURE-TREATED WITH PRESERVATIVE

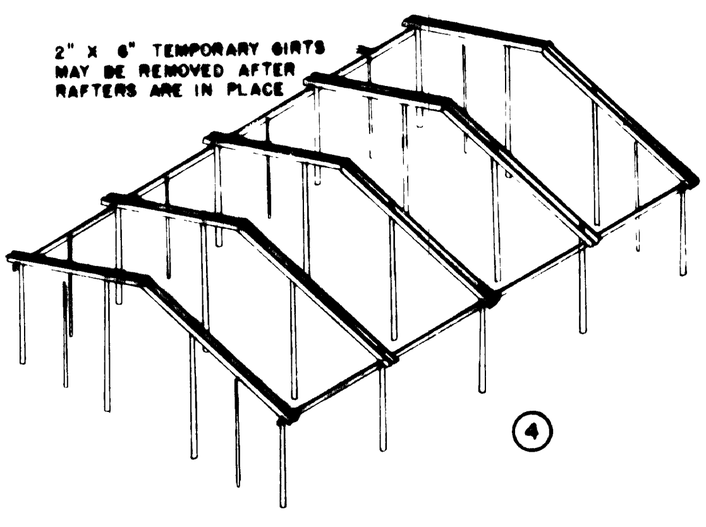


ERECTION OF BALANCE OF POLES & RAFTERS

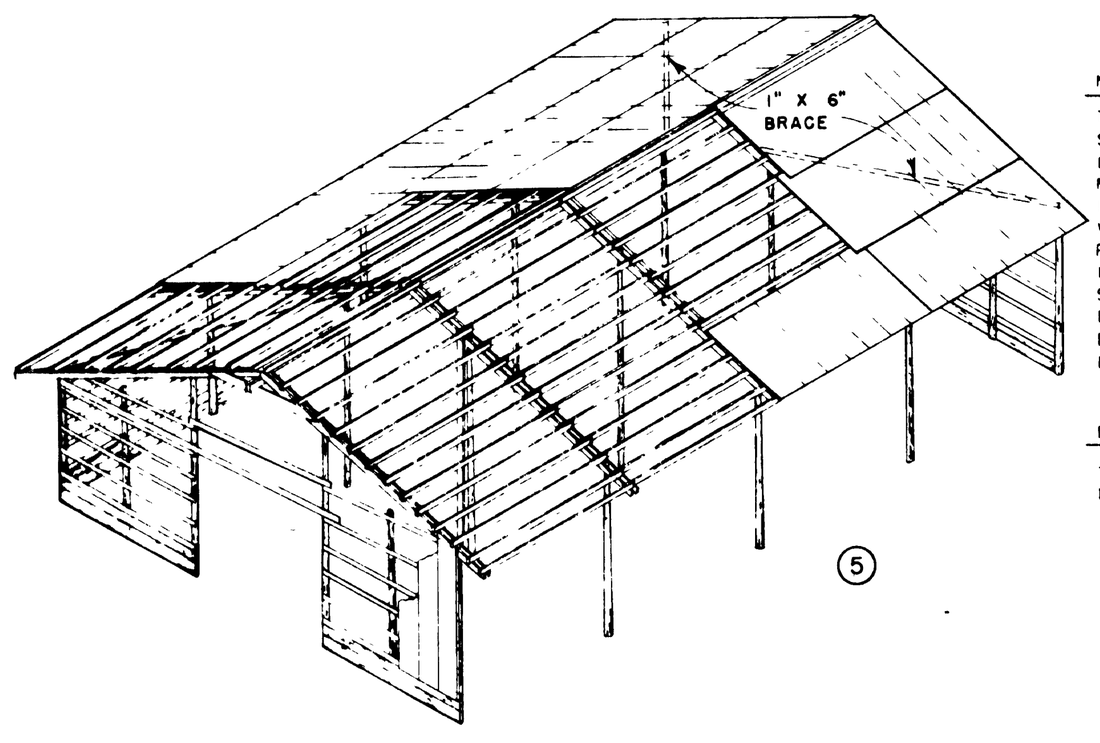


PURLINS, GIRTS, ROOFING & SIDING

NOTE

THIS BUILDING IS DESIGNED FOR AREAS OF THE SOUTHERN UNITED STATES WHERE THE SNOW LOAD DOES NOT EXCEED 10# PER SQ FT & WIND DOES NOT EXCEED 88 MI PER HOUR
IN A FEW AREAS, SUCH AS NORTHERN VIRGINIA & WESTERN KENTUCKY WHERE SNOW LOADS EXCEED 10# PER SQ FT, 2 X 12' RAFTERS SHOULD BE USED INSTEAD OF THE 2 X 10 RAFTERS SHOWN & PURLINS SHOULD BE SPACED 16 O C INCREASE NUMBER OF 30d NAILS IN RAFTER TO POLE CONNECTIONS 50%
IT SHOULD NOT BE USED IN OTHER AREAS WITHOUT REDESIGNING FRAMING TO MEET LOCAL CONDITIONS

NOTE

THIS BARN MAY BE BUILT IN ANY LENGTH DESIRED IN UNITS OF 15'-0"

COOPERATIVE EXTENSION WORK IN
AGRICULTURE AND HOME ECONOMICS
DEPARTMENT OF AGRICULTURAL ENGINEERING
UNIVERSITY OF KENTUCKY
AND
UNITED STATES DEPARTMENT OF AGRICULTURE COOPERATING

POLE BARN

| USDA '54 | EX 5780 | SHEET 1 OF 3 |
|---|---|---|

REVISED 1972