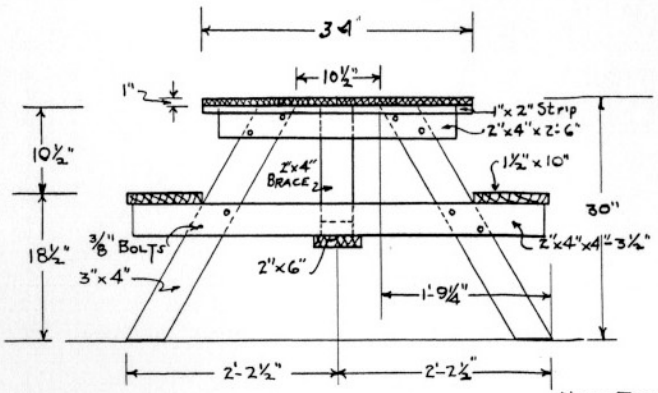

END VIEW
Scale 1" = 1'-0"

NOTE: TABLE CAN BE PUT TOGETHER WITH ⅜" BOLTS SO THAT IT CAN BE TAKEN APART AND STORED TOP SHOULD BE IN ONE PIECE AND CLEATED WITH 1"x 4" CLEATS. USE SCREWS FROM UNDER SIDE OF TOP THRU CLEATS.

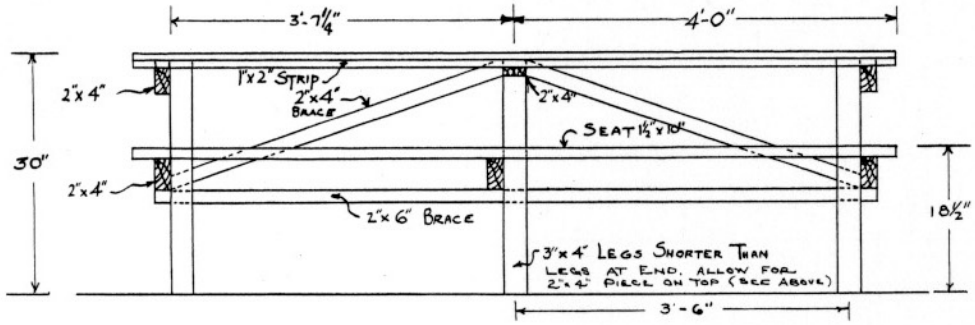

SIDE VIEW
Scale 1" = 1'-0".

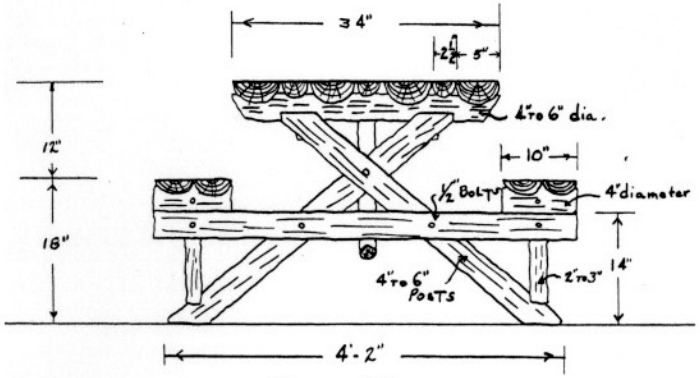

END VIEW
Scale 1" = 1'-0".

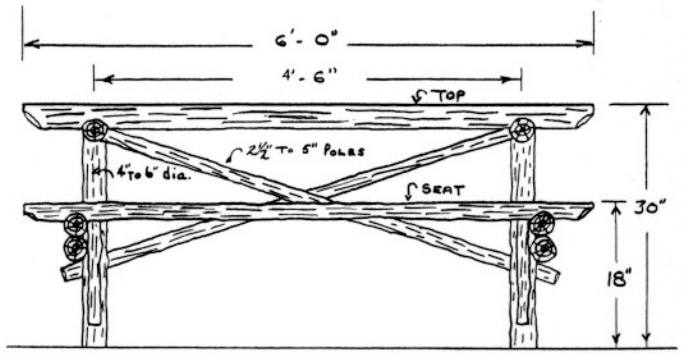

SIDE VIEW
Scale 1" = 1'-0".

COOPERATIVE EXTENSION WORK IN AGRICULTURE AND HOME ECONOMICS
DIVISION OF AGRICULTURAL ENGINEERING
COLLEGE OF AGRICULTURE
UNIVERSITY OF KENTUCKY AT LEXINGTON
AND
U.S. DEPT OF AGRIC. COOPERATING

PICNIC TABLES

DRAWN BY: J.B.B. MARCH 14, 1940
CHECKED BY: APPROVED BY:
TRACED BY: DATE:
Ky. 11.712-18