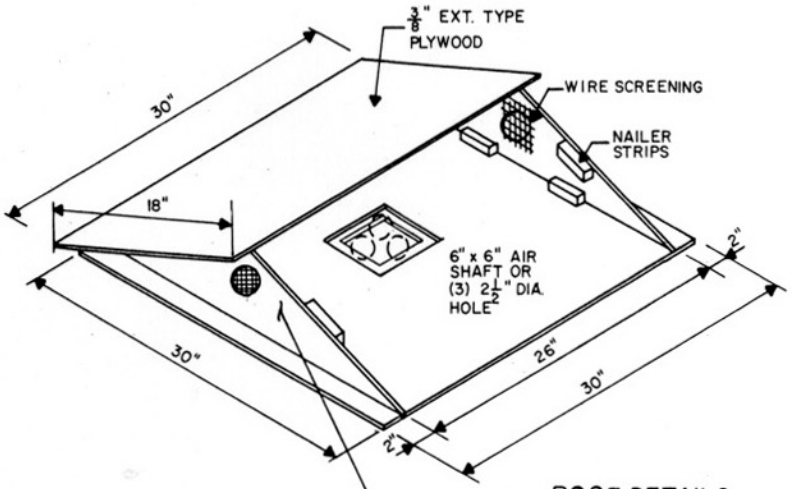

ROOF DETAILS

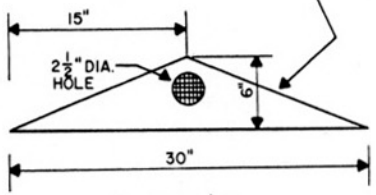

2 - REQ'D

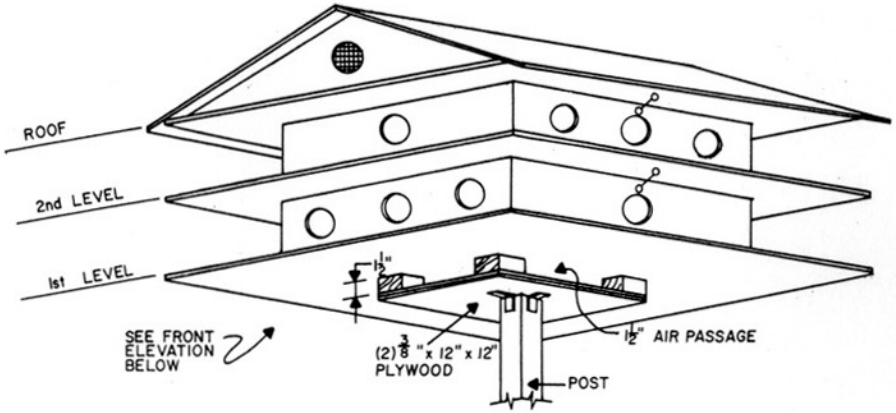

VIEW OF TWO LEVEL BIRDHOUSE

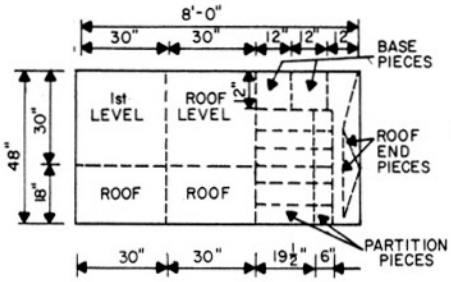

PLYWOOD CUTTING DIAGRAM FOR ONE LEVEL BIRDHOUSE

3/8" EXT. TYPE PLYWOOD

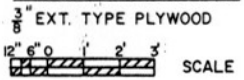

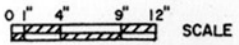

UNLESS OTHERWISE NOTED

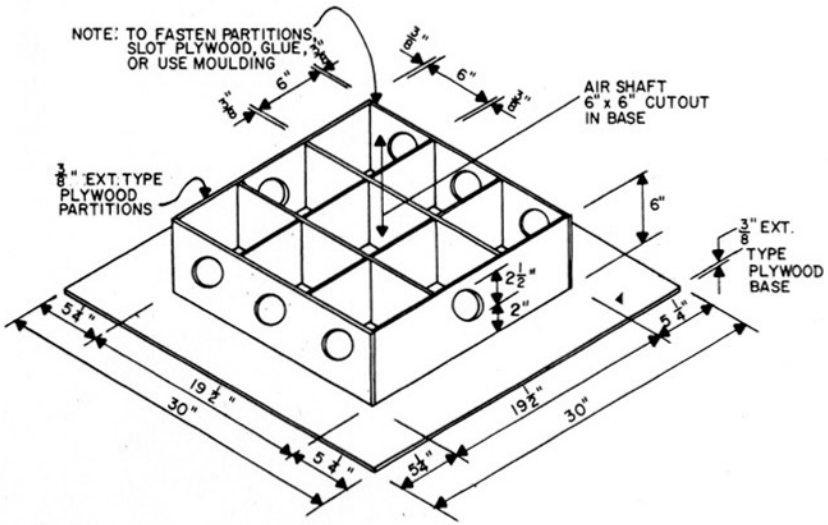

DETAILS OF ONE LEVEL

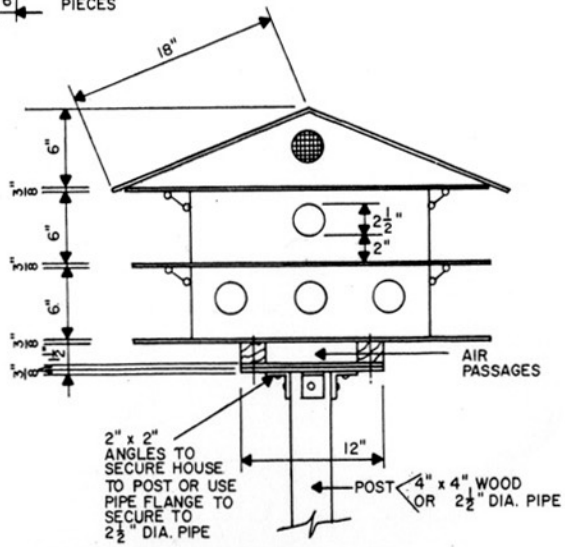

NOTE: 1. LOCATE NEAR AREA NEEDING INSECT CONTROL.
2. HEIGHT ABOVE GROUND IS 15'-20'.

FRONT ELEVATION

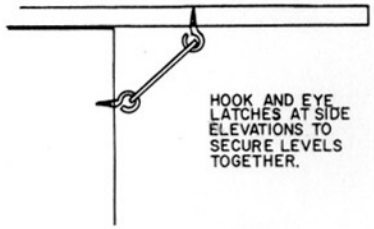

DETAIL FOR LATCHES

COOPERATIVE EXTENSION WORK IN AGRICULTURE AND HOME ECONOMICS

AND UNITED STATES DEPARTMENT OF AGRICULTURE COOPERATING

PURPLE MARTIN BIRDHOUSE

NJ'69	EX. 6344	SHEET 1 OF 1