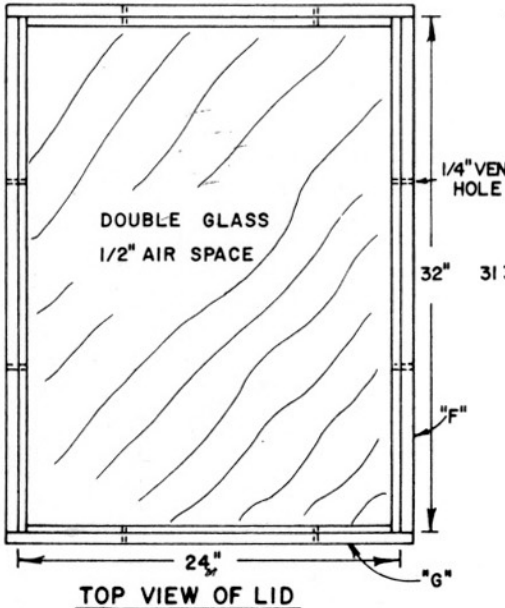


TOP VIEW OF LID

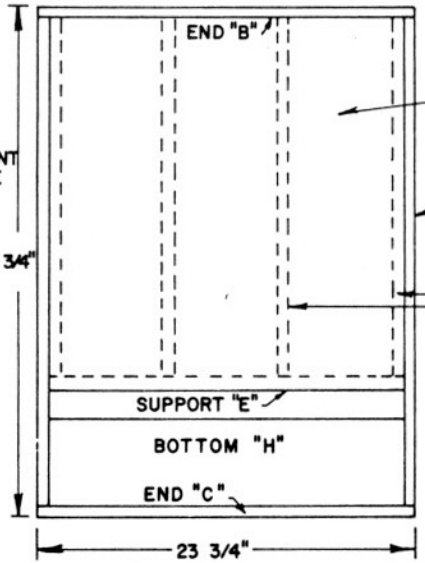


TOP VIEW OF BOX

NO SCALE

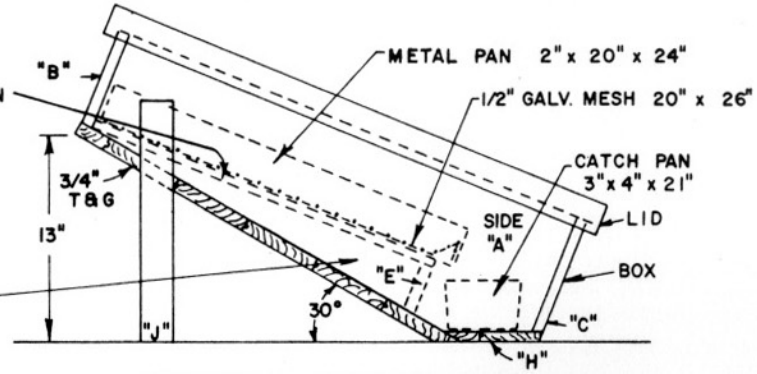


SIDE VIEW, COMPLETE UNIT

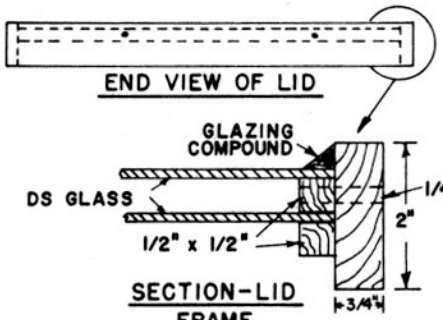


END VIEW OF LID

SECTION-LID FRAME

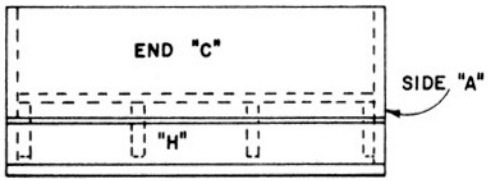


END VIEW OF BOX

NO SCALE

## NOTES

1. PAINT INSIDE WHITE.
2. PAINT OUTSIDE BLACK.
3. SEAL ALL CRACKS.
4. PLACE IN PROTECTED PLACE ON SOUTH SIDE OF A BUILDING.
5. REMOVE WAX AND HONEY WHEN MOST COMBS ARE MELTED. THE HONEY SHOULD BE DISCARDED.

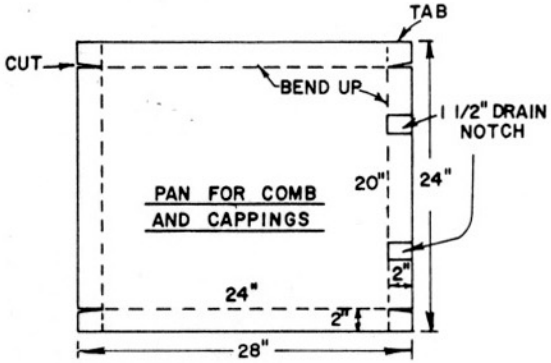


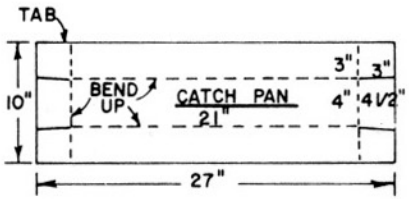

PAN CORNER DETAIL

CUTTING DIAGRAMS FOR 24 GA. GALVANIZED STEEL PANS

NO SCALE

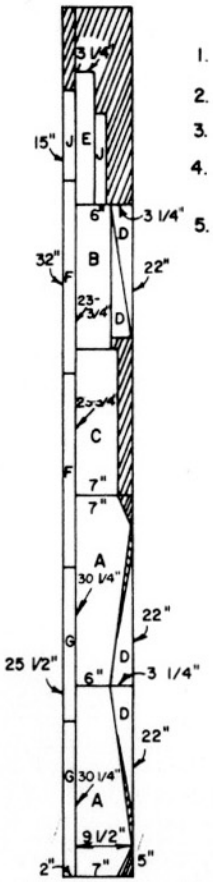


CUTTING DIAGRAM

1" x 12" x 12' BOARD — (3/4" x 11 1/2" x 12')

NO SCALE

BASED ON: PENN STATE UNIV. PLAN NO. 790-301

COOPERATIVE EXTENSION WORK IN AGRICULTURE AND HOME ECONOMICS

AND UNITED STATES DEPARTMENT OF AGRICULTURE COOPERATING

SOLAR BEESWAX EXTRACTOR

| PA | '77 | 6265 | SHEET 1 OF 1 |
|---|---|---|---|