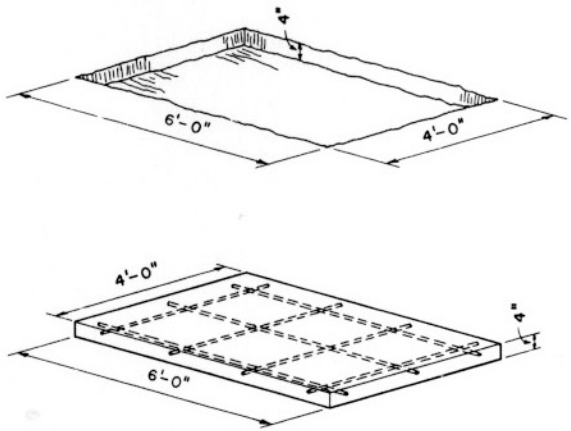

REINFORCED CONCRETE SLAB

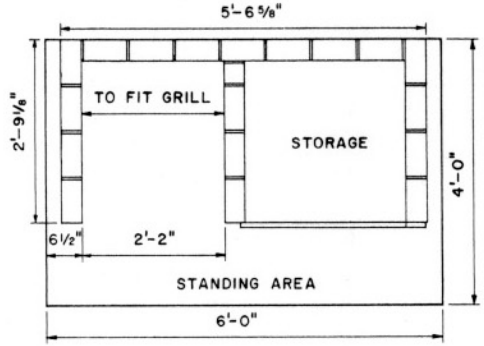

GROUND PLAN

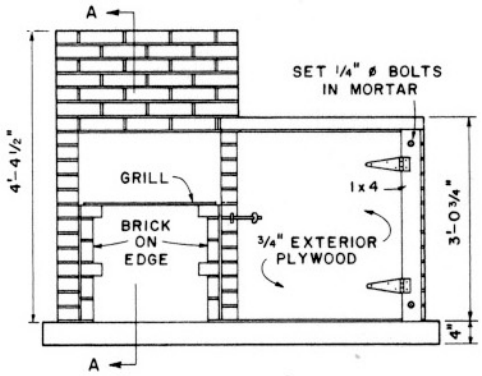

FRONT ELEVATION

SECTION A-A

BILL OF MATERIALS

FOUNDATION: MIX-1:2 1/4:3
- CEMENT 2 SACKS
- SAND 4 2/3 CU. FT.
- GRAVEL 7 1/2 CU. FT.
- STEEL RODS 4 PCS. 3'-10"x 3/8" ø
  3 PCS. 5'-10"x 3/8" ø

BRICK:
- 360 COMMON

MORTAR: MIX-1:3
- CEMENT 1 SACK
- SAND 3 CU. FT.

HARDWARE:
- 2 BOLTS 3 1/2"x 1/4" ø
- 2 HINGES 6"
- 1 HOOK, DOOR
- 1 GRILL

LUMBER:
- 1 PC. 1x4x3'-0"
- 1 PC. 3/4" EXT. PLYWOOD 2'-6"x 2'-10"

NOTE:
ONE 3x3x1/4x2'-8" STEEL ANGLE FOR FLUE. CONSULT LOCAL BUILDING CODE AUTHORITIES BEFORE STARTING CONSTRUCTION.

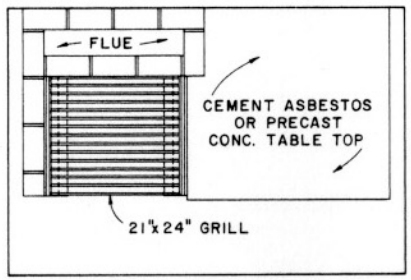

PLAN AT WORKING LEVEL

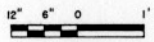

COOPERATIVE EXTENSION WORK IN AGRICULTURE AND HOME ECONOMICS

AND

UNITED STATES DEPARTMENT OF AGRICULTURE COOPERATING

BARBECUE PIT

USDA '76	6258	SHEET 1 OF 1

BASED ON: TEXAS A&M UNIV. PLAN NO. 392