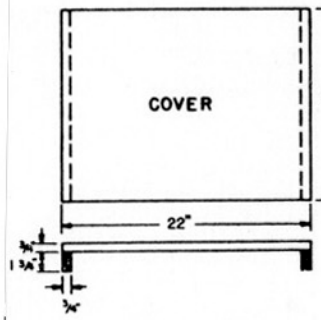

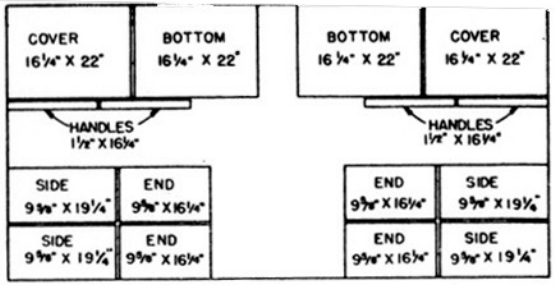

CUTTING PLAN FOR PLYWOOD PARTS SHOWING ACTUAL DIMENSIONS ALLOW FOR SAW KERFS ON SAWN EDGES. (ONE HIVE BODY FROM 4' X 4' PLYWOOD, FULL SUPER.)

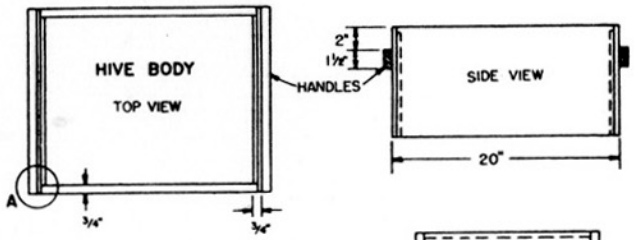

ALTERNATE DIMENSIONS FOR AN 8-FRAME UNIT ARE IN BRACKETS.

MATERIALS LIST

10'-10"-2" X 6" PINE OR FIR
4' X 4' X ¾" A-A EXTERIOR PLYWOOD
1 3/8" X ¾" X 33" PINE OR FIR
1" X ¾" X 20" PINE OR FIR
¾" X ¾" X 60" PINE OR FIR
1 3/8" X 3/8" X 19" PINE OR FIR
¾" X 3/8" X 80" PINE OR FIR
1 LB. 6d BOX NAILS

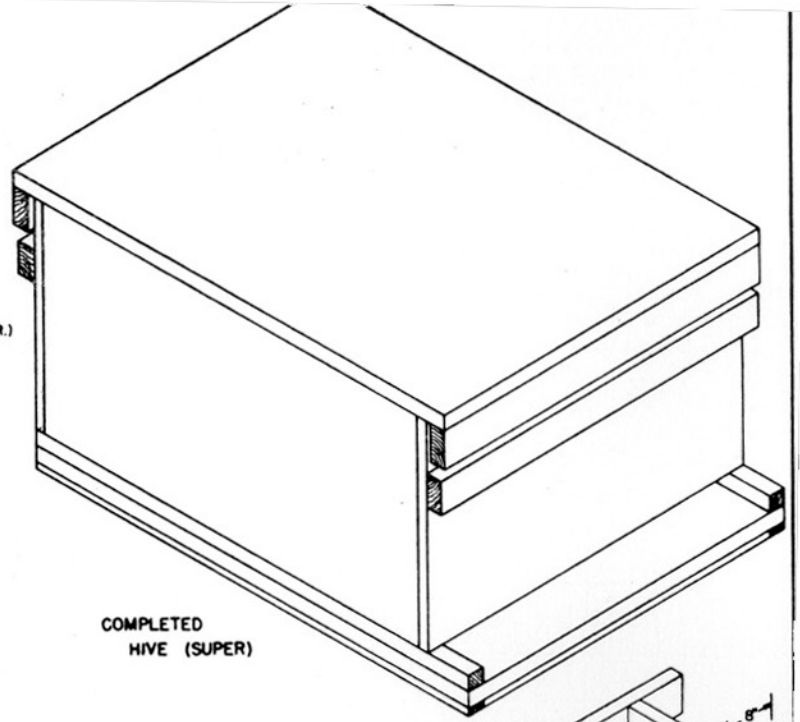

COMPLETED HIVE (SUPER)

DEPTHS FOR HIVES

FULL SUPER = 9 9/16"
THREE-QUARTER SUPER = 6 9/16"
SHALLOW SUPER = 5 3/4"

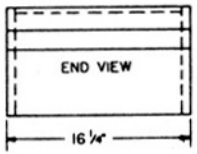

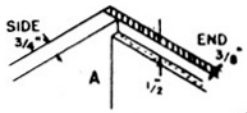

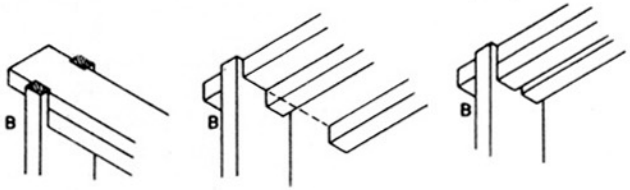

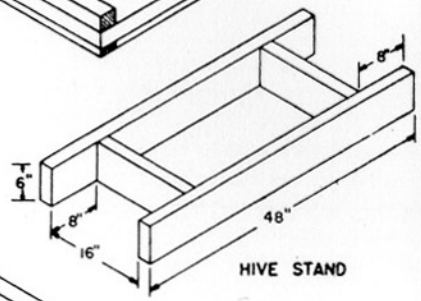

HIVE STAND

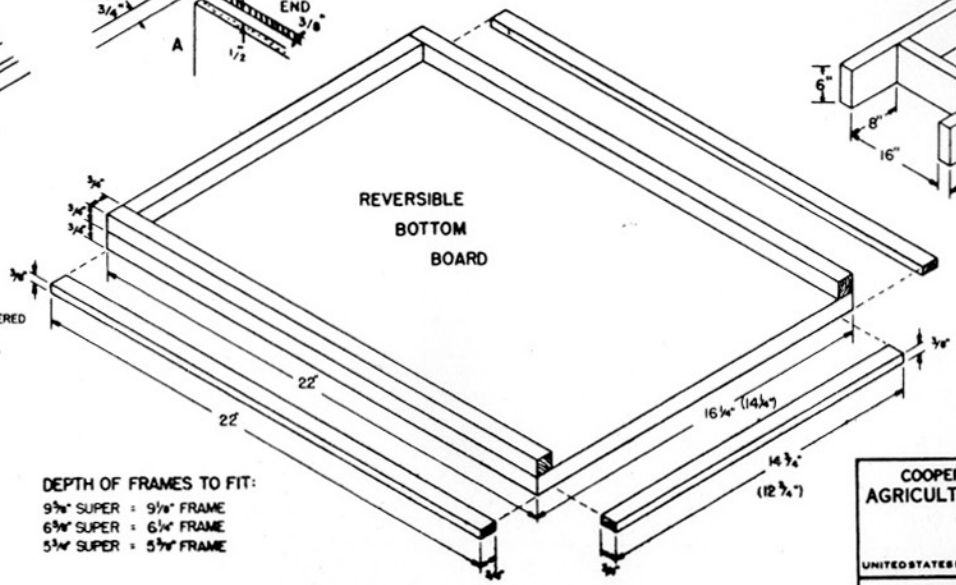

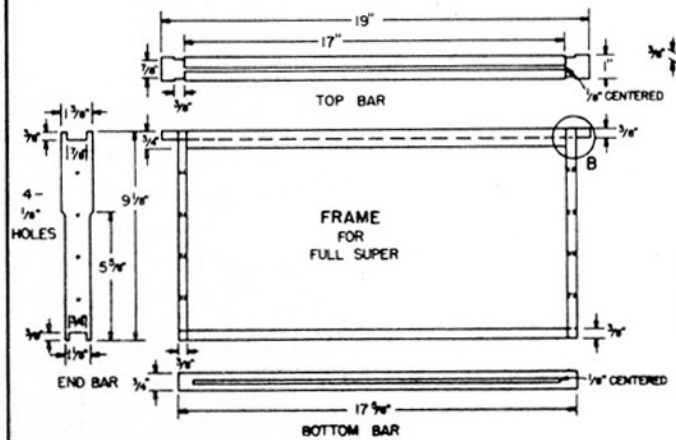

DEPTH OF FRAMES TO FIT:

9 9/16" SUPER = 9 1/8" FRAME
6 9/16" SUPER = 6 1/8" FRAME
5 3/4" SUPER = 5 9/16" FRAME

NO SCALE

COOPERATIVE EXTENSION WORK IN AGRICULTURE AND HOME ECONOMICS

AND

UNITED STATES DEPARTMENT OF AGRICULTURE COOPERATIN

BEEHIVE AND FRAME

OR. '75	6231	SHEET 1 OF 1

BASED ON: OREGON STATE UNIV. PLAN NO. BP 116