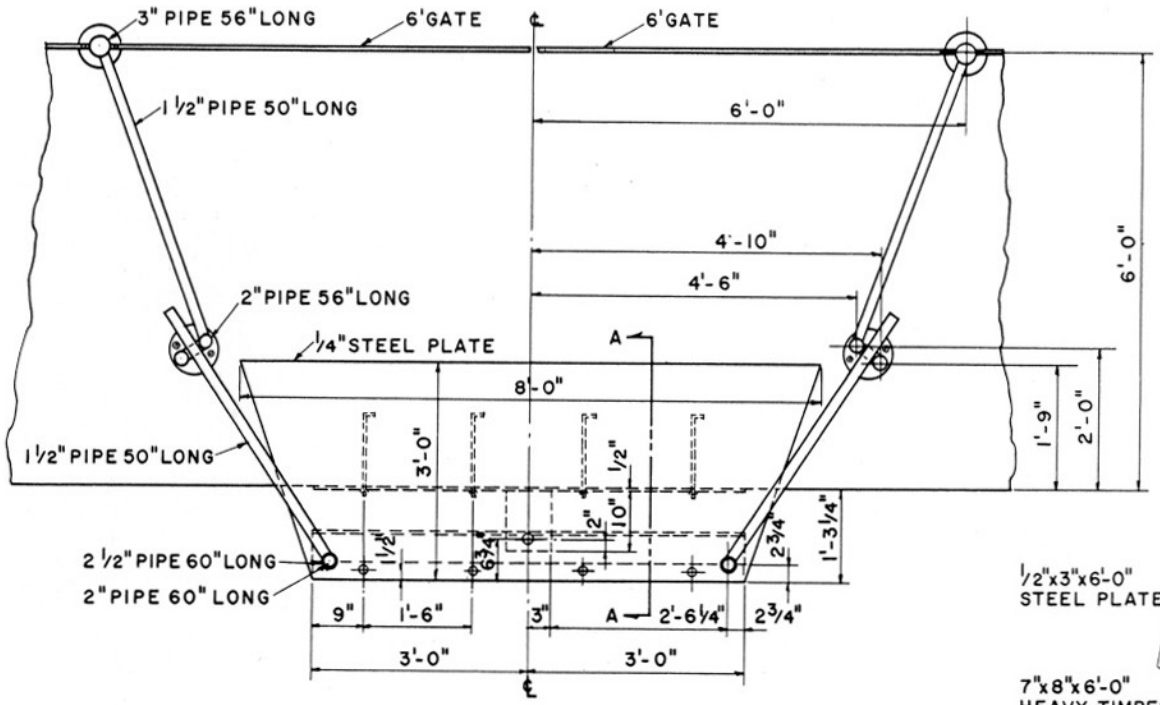

PLAN

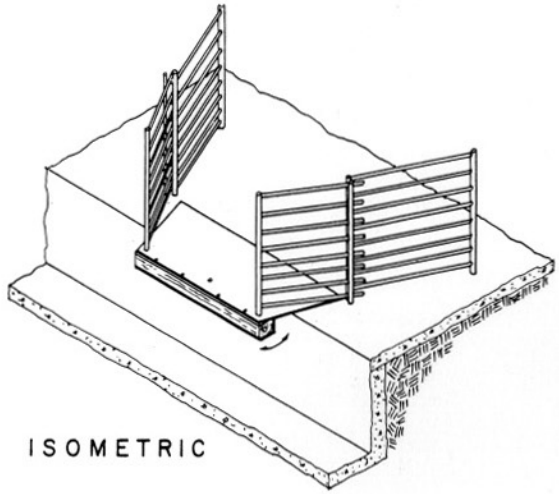

ISOMETRIC

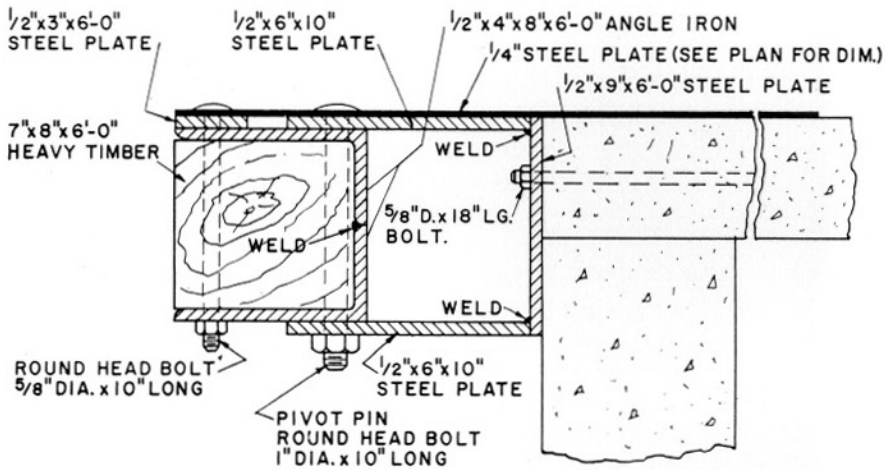

SECTION A-A

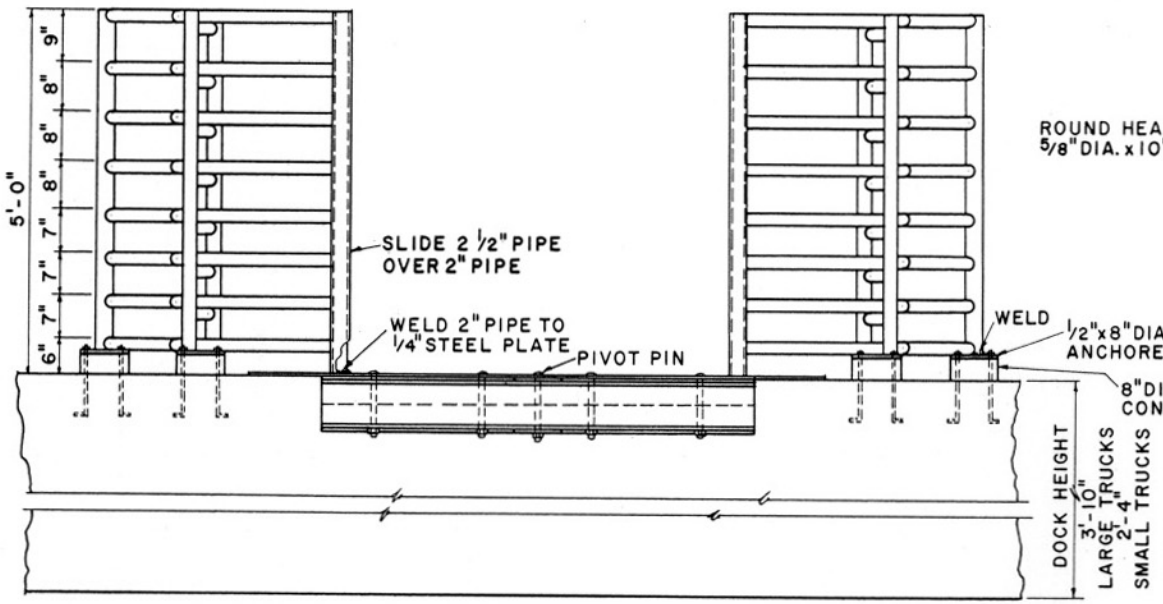

ELEVATION

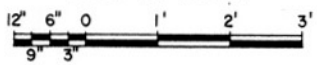

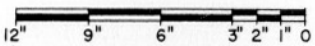

BASED ON: W. VA. UNIV. PLAN NO. M1-140

COOPERATIVE EXTENSION WORK IN AGRICULTURE AND HOME ECONOMICS

AND UNITED STATES DEPARTMENT OF AGRICULTURE COOPERATING

DOCK BUMPER
SELF ALIGNING

W. VA.	'74	EX. 6177	SHEET 1 OF 1

DRN BY: MJK TR BY: MST CHK BY: AWS DATE: 1/74