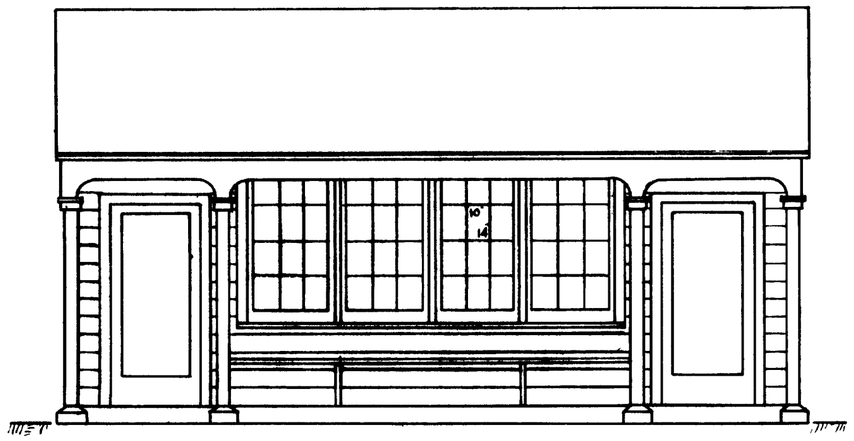

FRONT ELEVATION

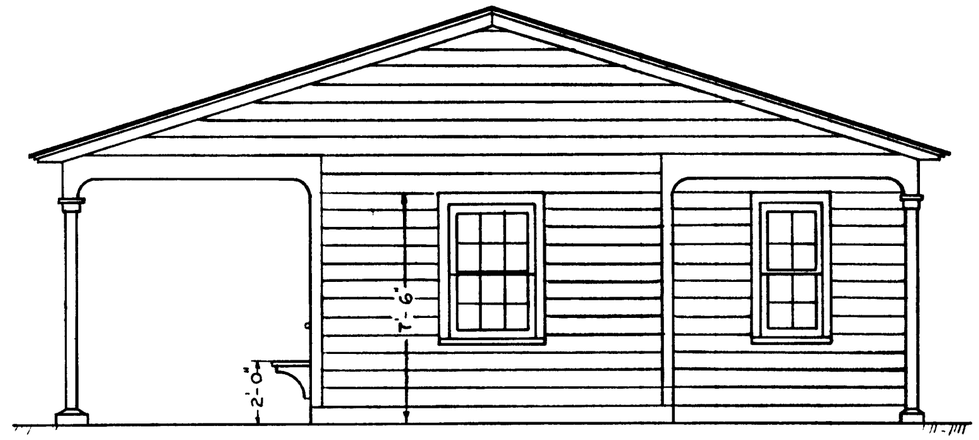

SIDE ELEVATION

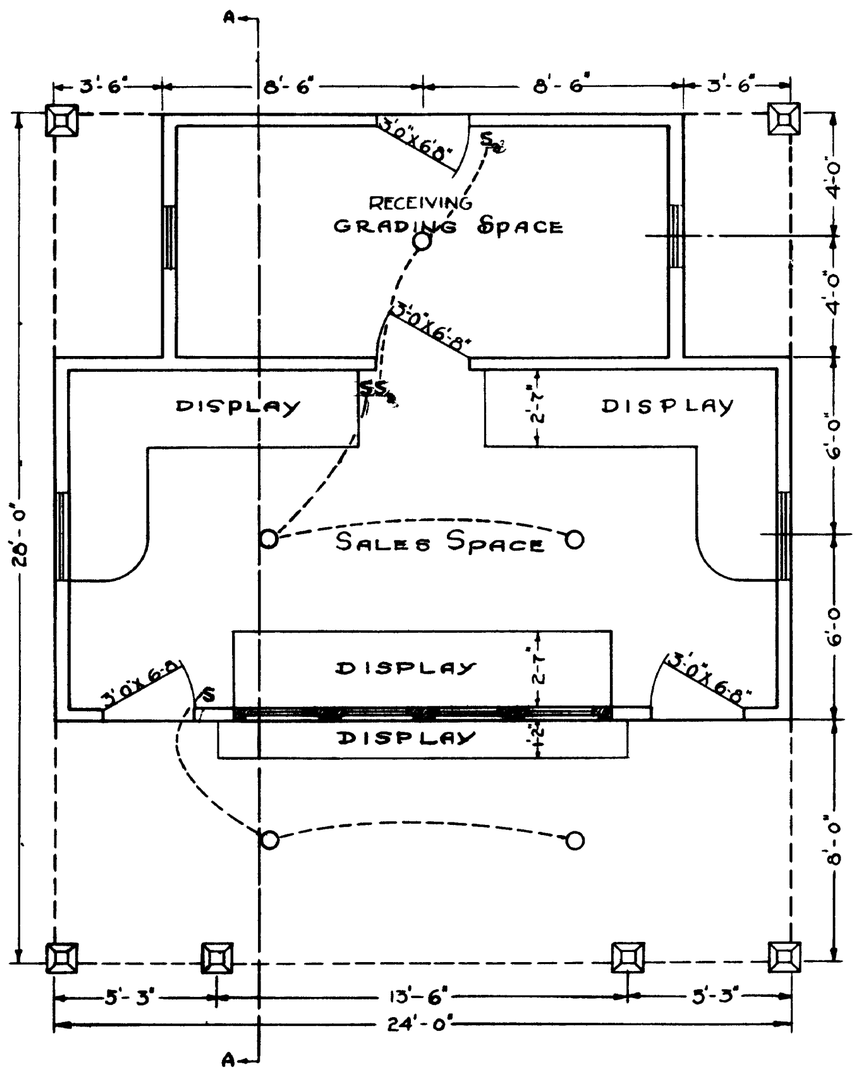

PLAN

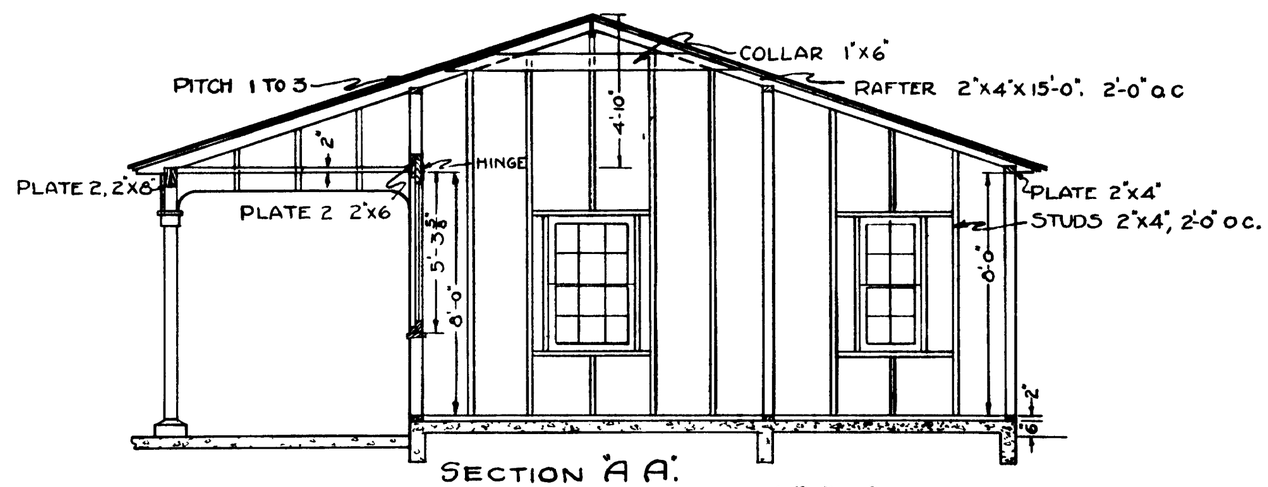

SECTION "A A"

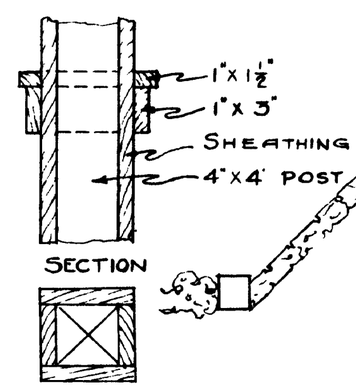

DETAIL OF COLUMN

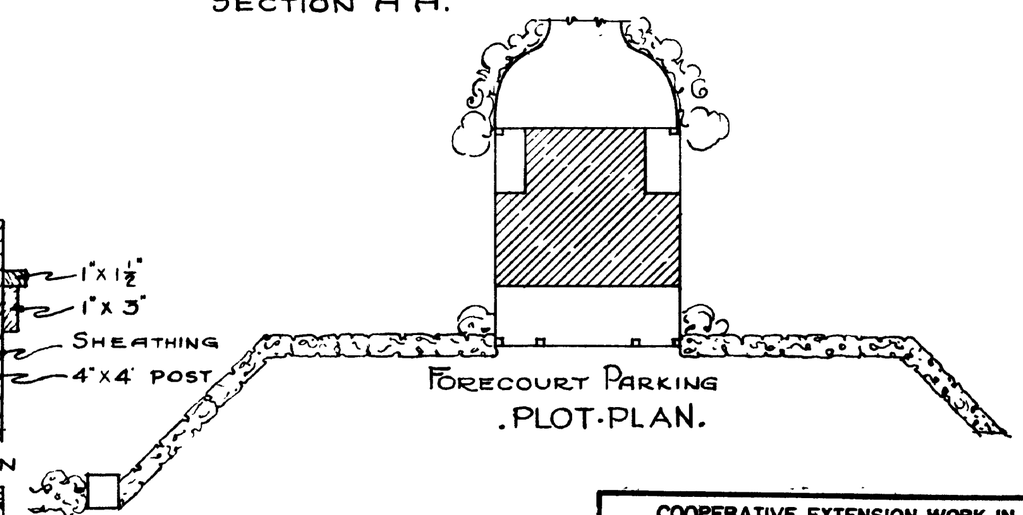

FORECOURT PARKING
.PLOT-PLAN.

COOPERATIVE EXTENSION WORK IN
AGRICULTURE AND HOME ECONOMICS
DEPARTMENT OF AGRICULTURAL ENGINEERING
COLLEGE OF AGRICULTURE
UNIVERSITY OF KENTUCKY
AND
UNITED STATES DEPARTMENT OF AGRICULTURE COOPERATING

ROADSIDE STAND

MD.	EX. 5192	SHEET 1 OF 1

REVIEWED 1972

REVISED 1949