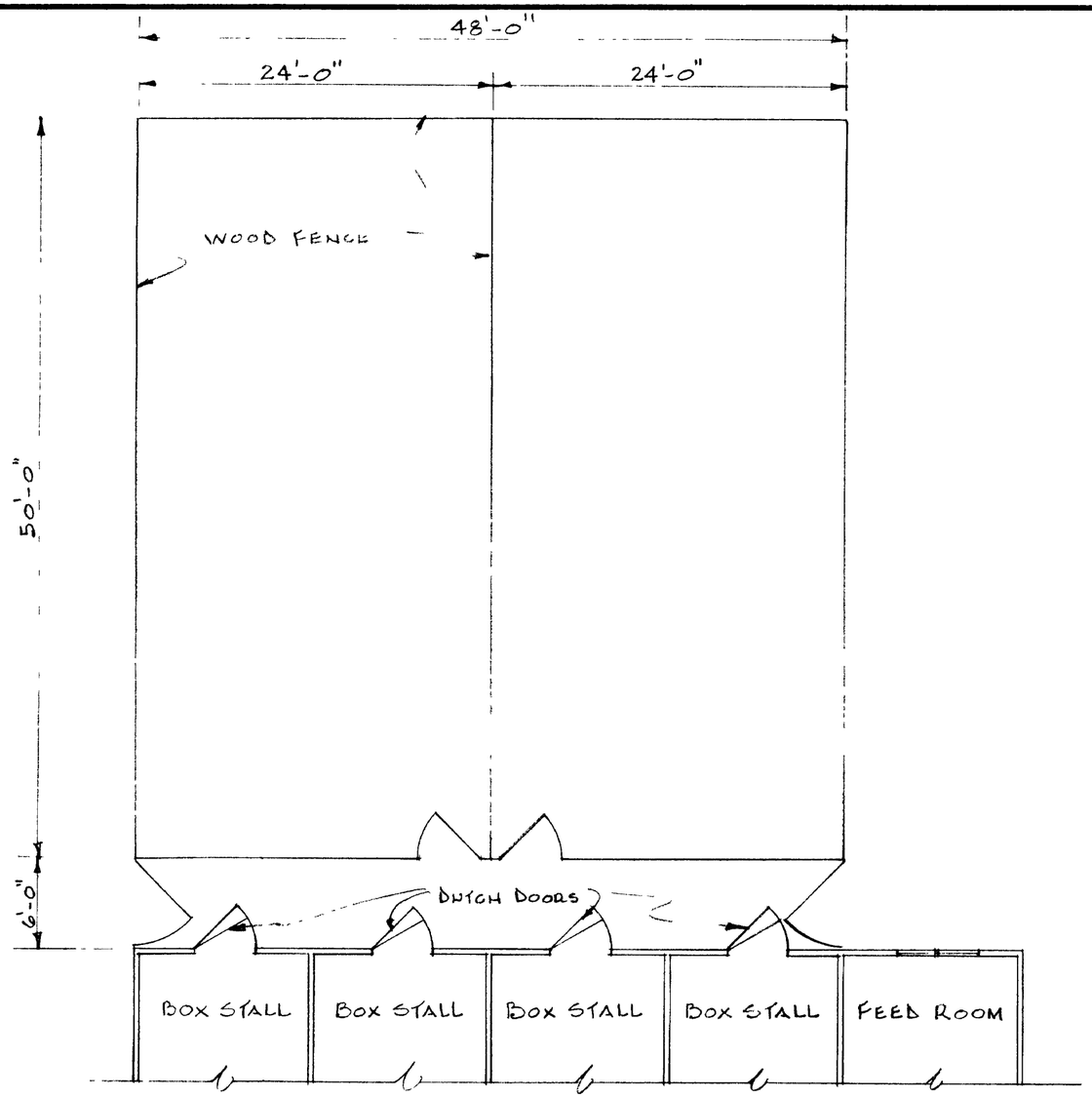

ALTERNATE PLAN SHOWING PADDOCK ON REAR OF BUILDING
SCALE: 1/8" = 1'-0"

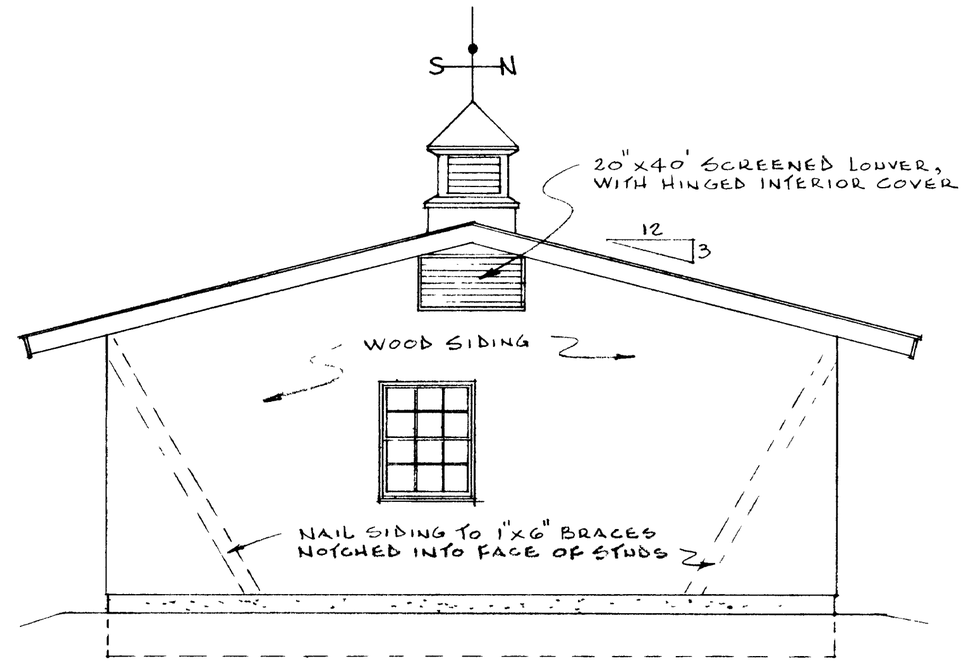

RIGHT END ELEVATION
SCALE: 1/4" = 1'-0"

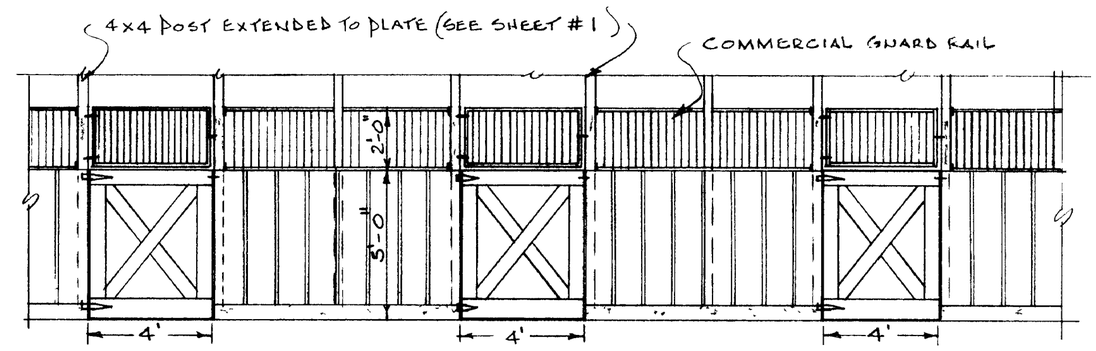

ALTERNATE OPEN FRONT FOR STALLS
SCALE: 1/4" = 1'-0"

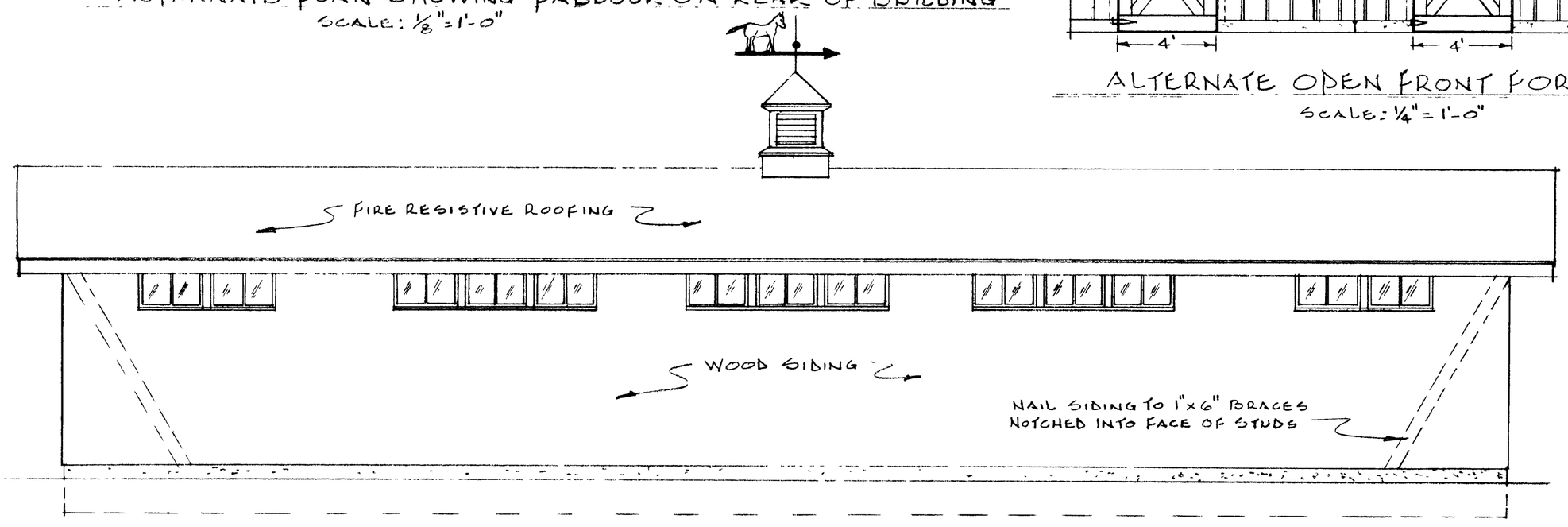

REAR ELEVATION
SCALE: 1/4" = 1'-0"

COOPERATIVE EXTENSION WORK IN
AGRICULTURE AND HOME ECONOMICS
DEPARTMENT OF AGRICULTURAL ENGINEERING
COLLEGE OF AGRICULTURE
UNIVERSITY OF KENTUCKY &
U S DEPARTMENT OF AGRICULTURE COOPERATING

RIDING HORSE BARN
(4 STALLS)

Designed By J B B & G.D.P.	Sheet 2 of 3
Checked By	Plan Number
Drawn By B.E. SLABTER	KY. 11. 722-1
Date SEPT. 1970	

REVIEWED 1979

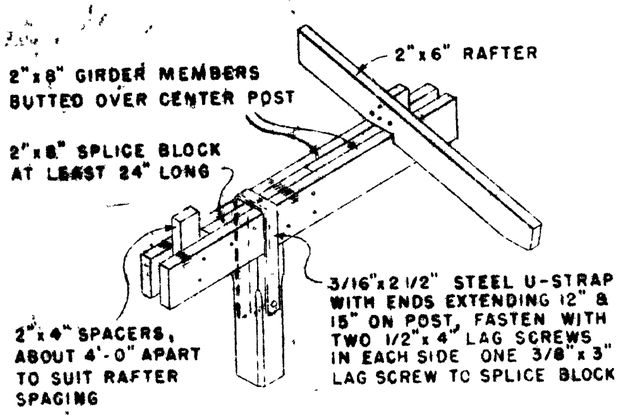

POST, GIRDER & RAFTER DETAIL

THE THREE PART GIRDER IS SIMILAR EXCEPT THE CENTER MEMBER JOINT SHALL BE 18" TO 30" FROM CENTER POST

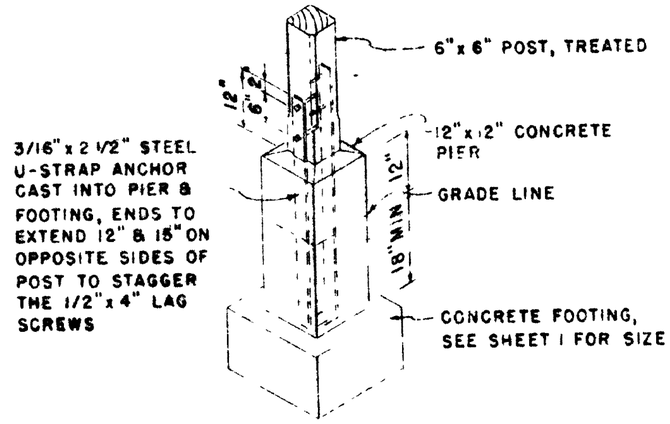

FOOTING, PIER & POST DETAIL

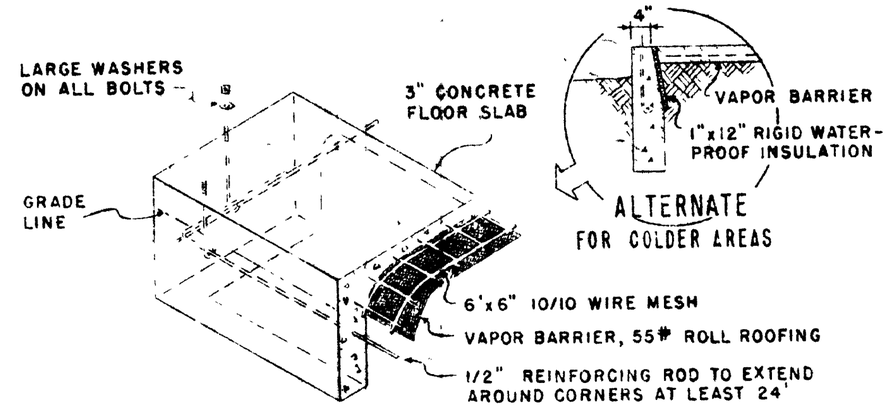

FOUNDATION & FLOOR DETAIL AT CORNER
FOR FEED & TACK ROOMS

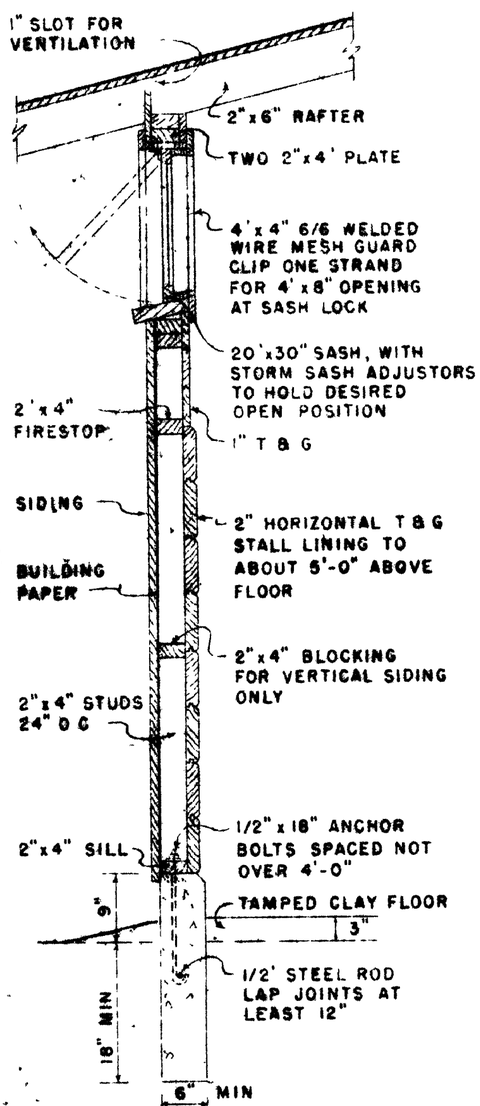

FOUNDATION, WALL & STALL WINDOW DETAIL
SCALE 3/4"=1'-0"

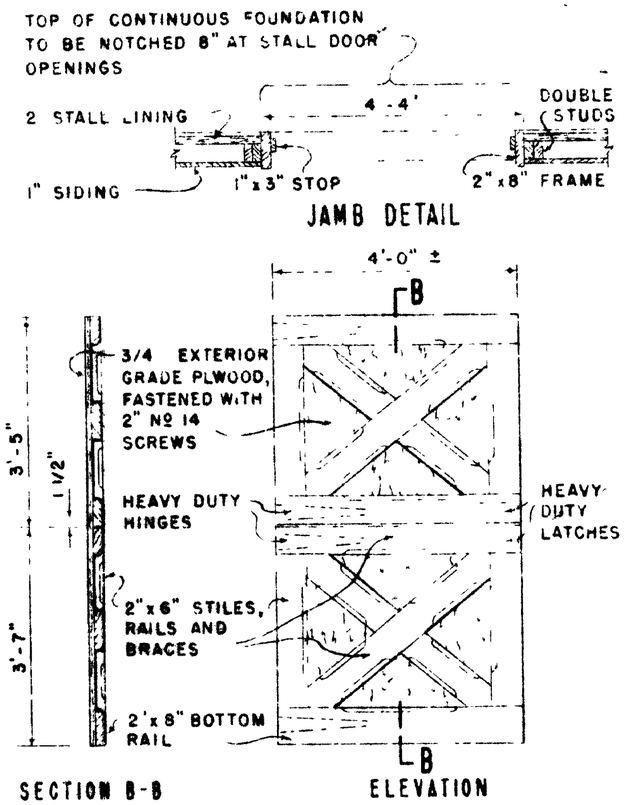

STALL DOOR DETAILS
SCALE 1/2"-1'-0"

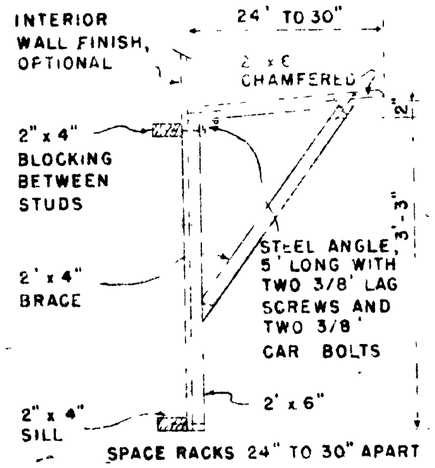

SADDLE RACK
SCALE 3/4"=1'-0"

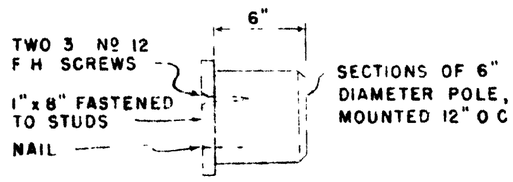

BRIDLE RACK
SCALE 1 1/2"=1'-0"

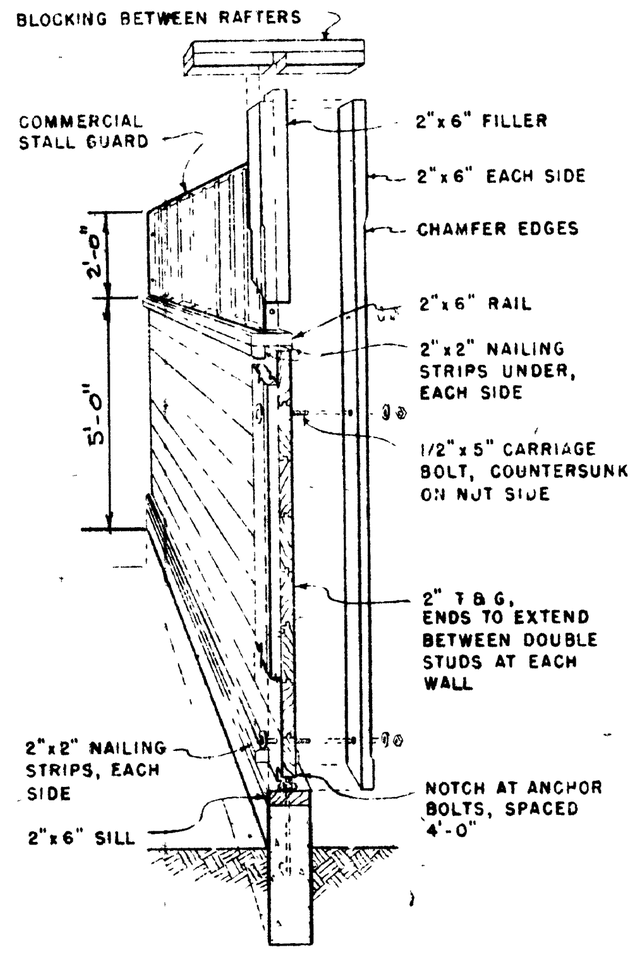

CUTAWAY SECTION
STALL PARTITION

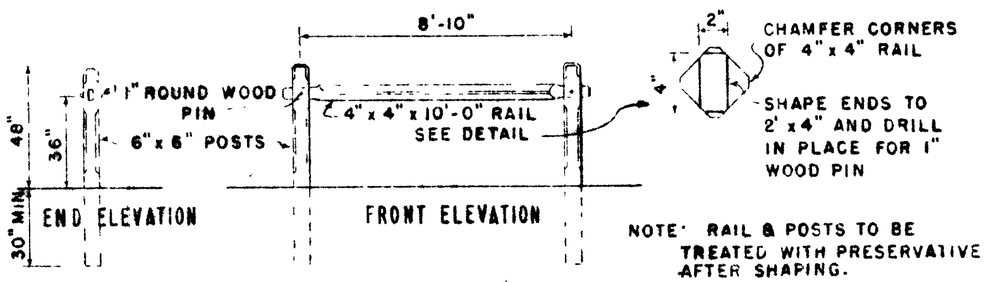

NOTE: RAIL & POSTS TO BE TREATED WITH PRESERVATIVE AFTER SHAPING.

HITCHING RAIL
SCALE 1/4"=1'-0"

COOPERATIVE EXTENSION WORK IN
AGRICULTURE AND HOME ECONOMICS
DEPARTMENT OF AGRICULTURAL ENGINEERING
UNIVERSITY OF KENTUCKY, LEX., KY.
COOPERATION WITH
UNITED STATES DEPARTMENT OF AGRICULTURE COOPERATING

RIDING HORSE BARN

SHEET 3 OF 3

PLAN NUMBER KY-IL 722-1

REVISED 1972

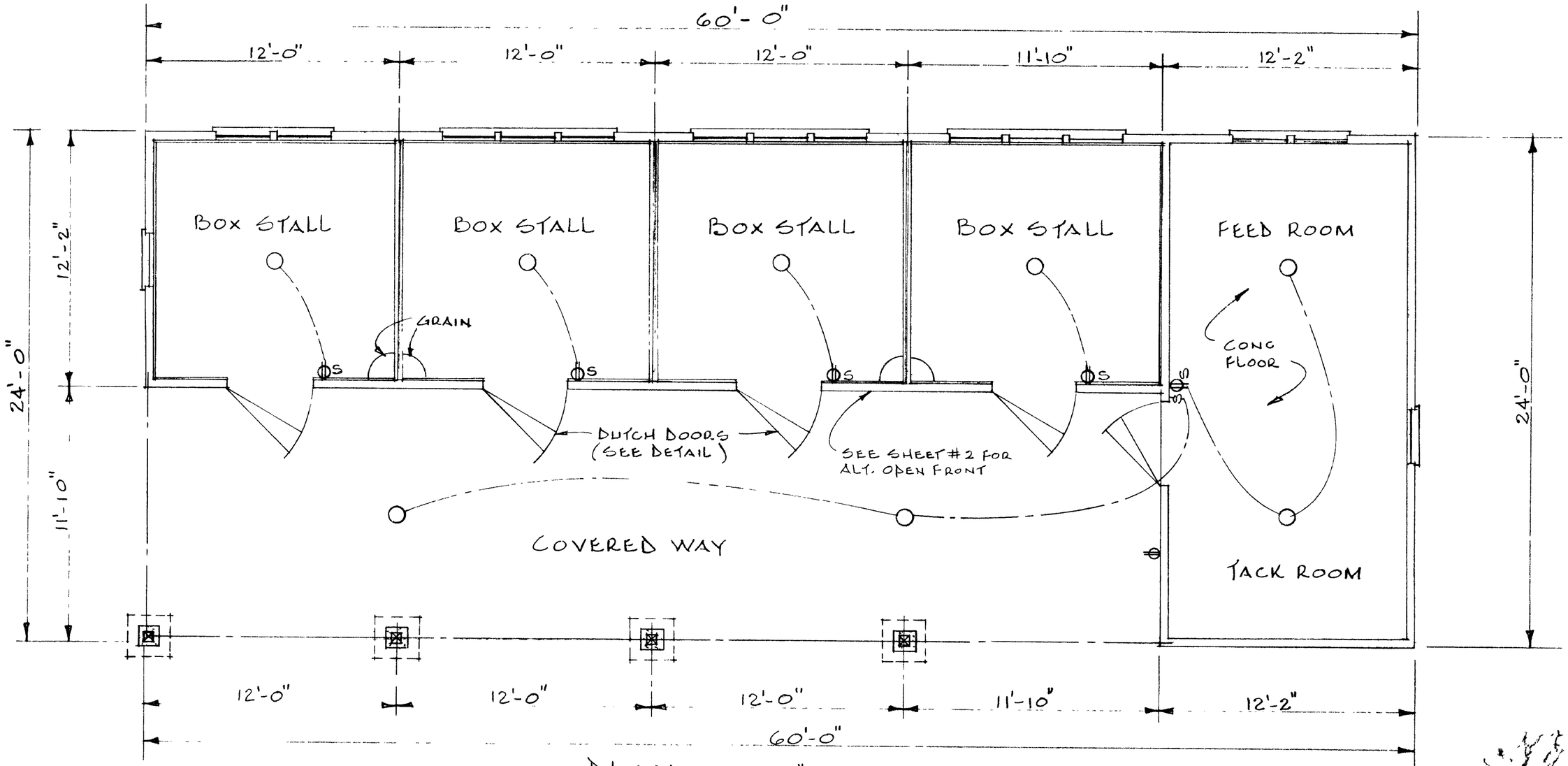

PLAN SCALE: 1/4"=1'-0"

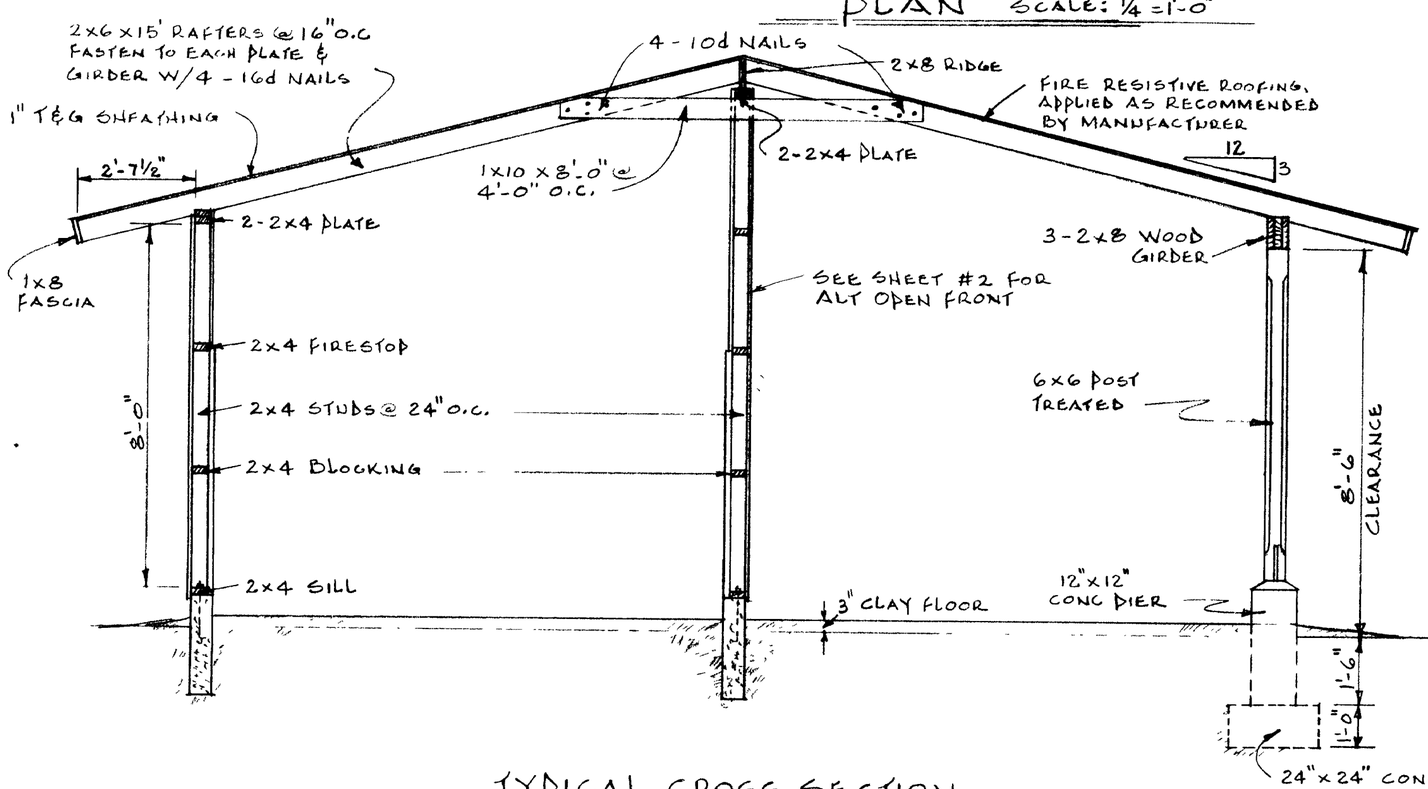

TYPICAL CROSS SECTION
SCALE 3/8"=1'-0"

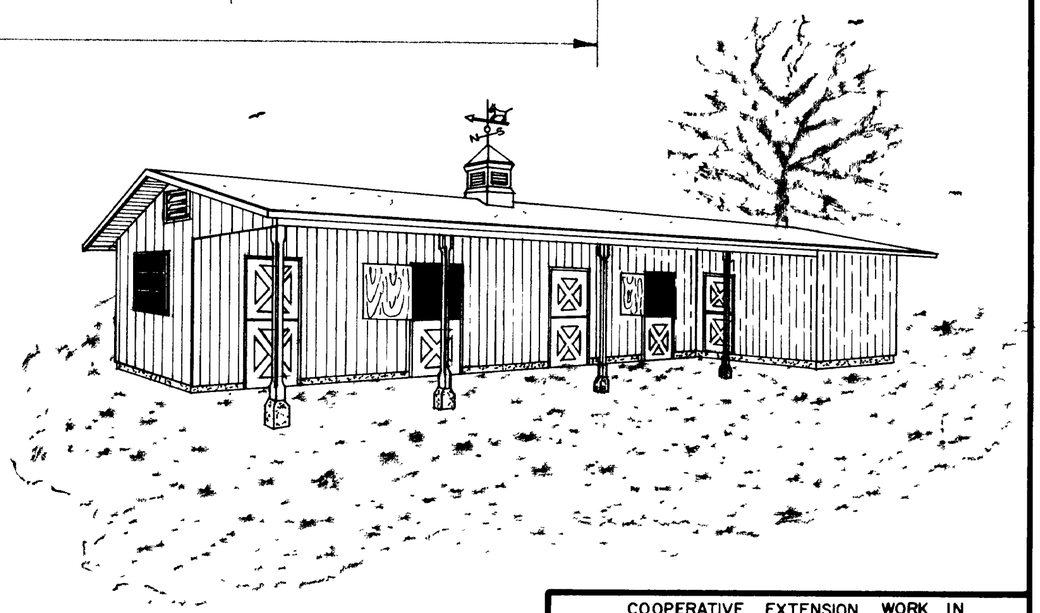

COOPERATIVE EXTENSION WORK IN
AGRICULTURE AND HOME ECONOMICS
DEPARTMENT OF AGRICULTURAL ENGINEERING
COLLEGE OF AGRICULTURE
UNIVERSITY OF KENTUCKY &
U S DEPARTMENT OF AGRICULTURE COOPERATING

RIDING HORSE BARN (4 STALLS)

Designed By JBD&GDP	Sheet 1 of 3
Checked By	Plan Number
Drawn By D.E. PASTER	KY. 11. 722-1
Date SEPT. 1970	

REVIEWED 1972