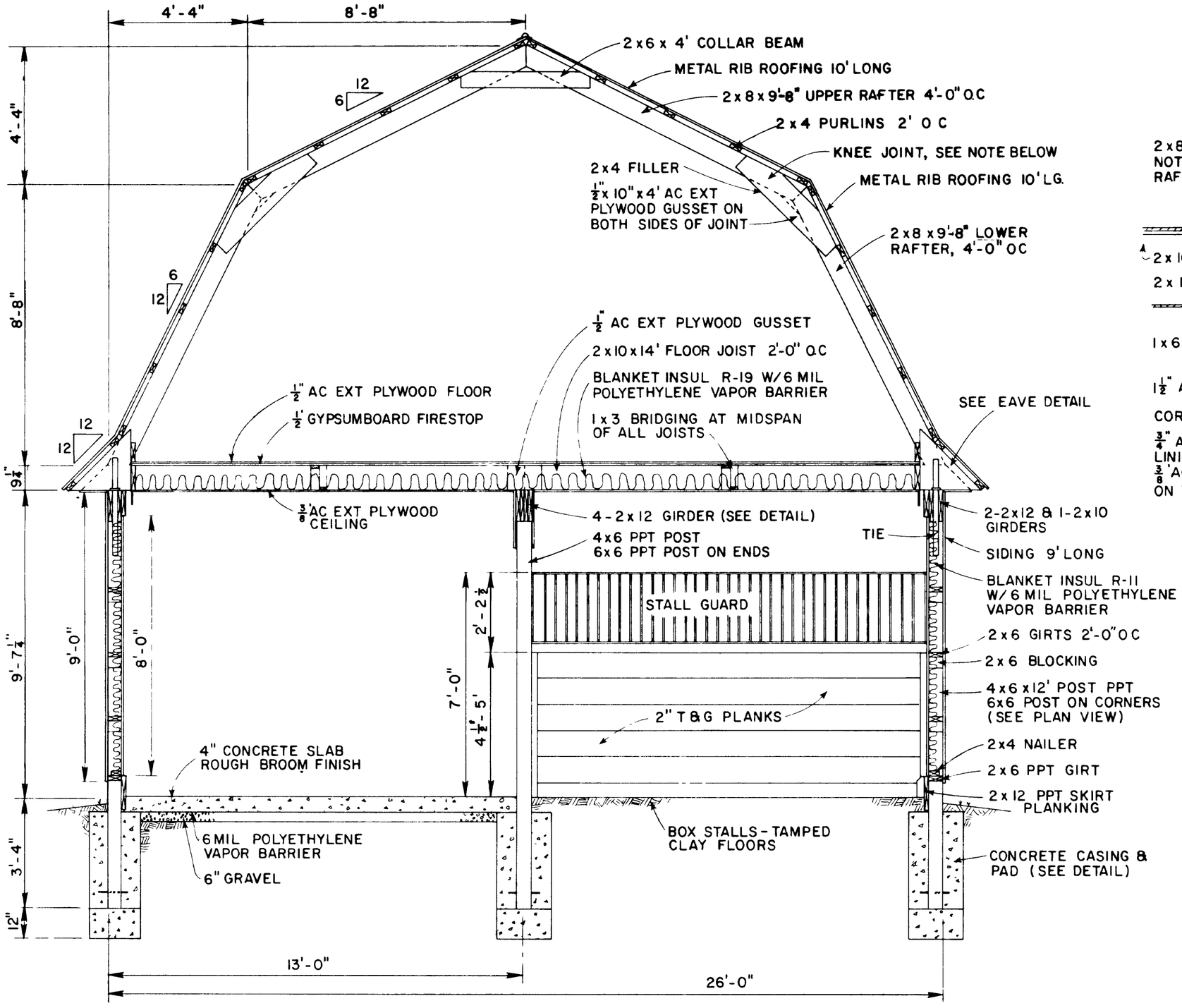

SECTION

SCALE 1/32 0 1 2 3 ft / 0 0.3 0.6 0.9 m

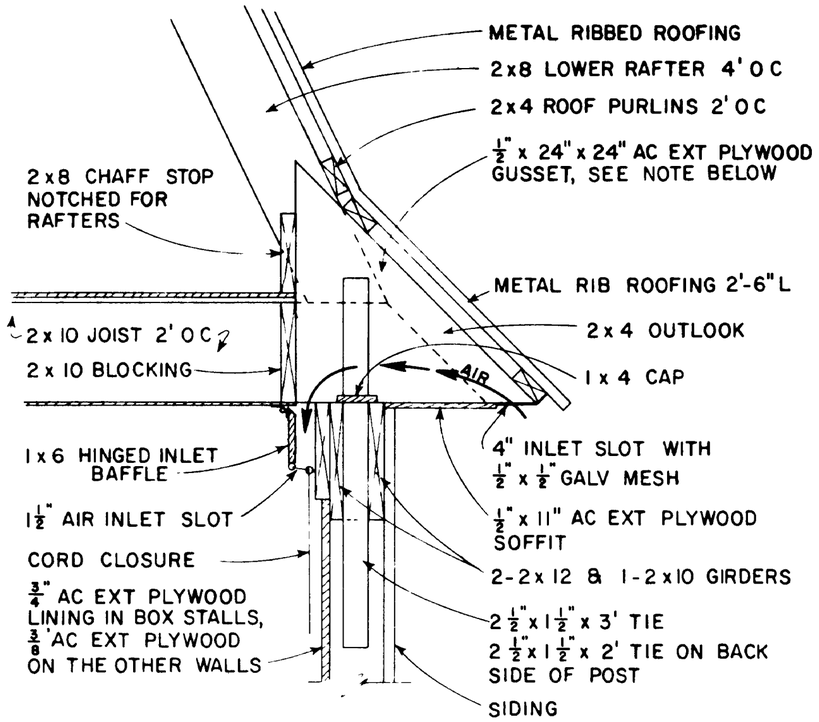

EAVE, GUSSET & VENTILATION INLET DETAIL

SCALE 1/12 0 0.5 1 ft / 0 0.3 m

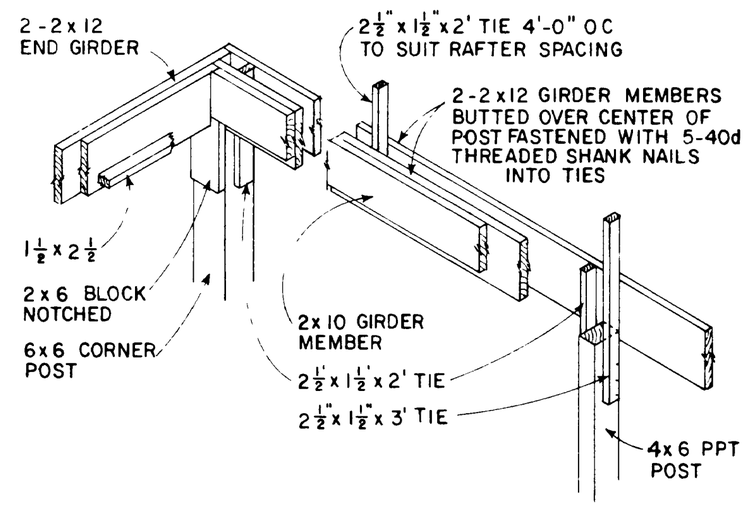

SIDE POST & GIRDER DETAIL

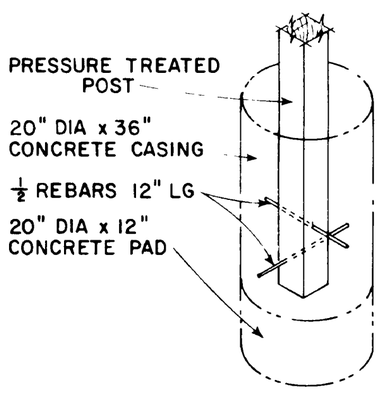

CASING & PAD DETAIL

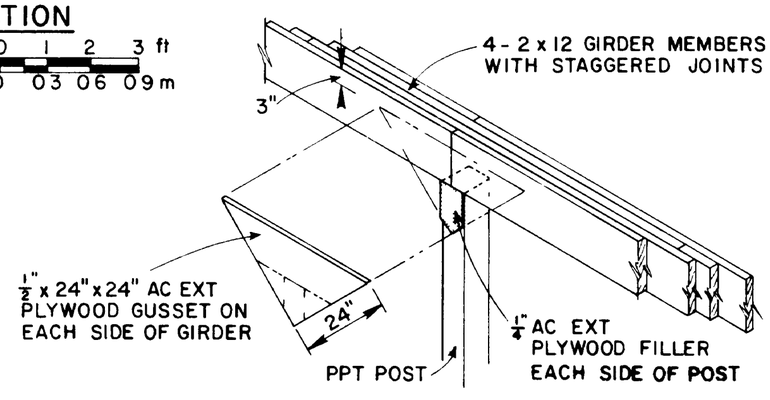

CENTER POST & GIRDER DETAIL

NOTE
ALL GUSSETS ARE NAILED WITH 8d THREADED SHANK NAILS IN A 3"x3" GRID PATTERN WITH 1" EDGE AND END CLEARANCE.

COOPERATIVE EXTENSION WORK IN AGRICULTURE AND HOME ECONOMICS

AND

UNITED STATES DEPARTMENT OF AGRICULTURE COOPERATING

HORSE BARN-26'x48'
GAMBREL ROOF

N.Y. '77	6285	SHEET 2 OF 3

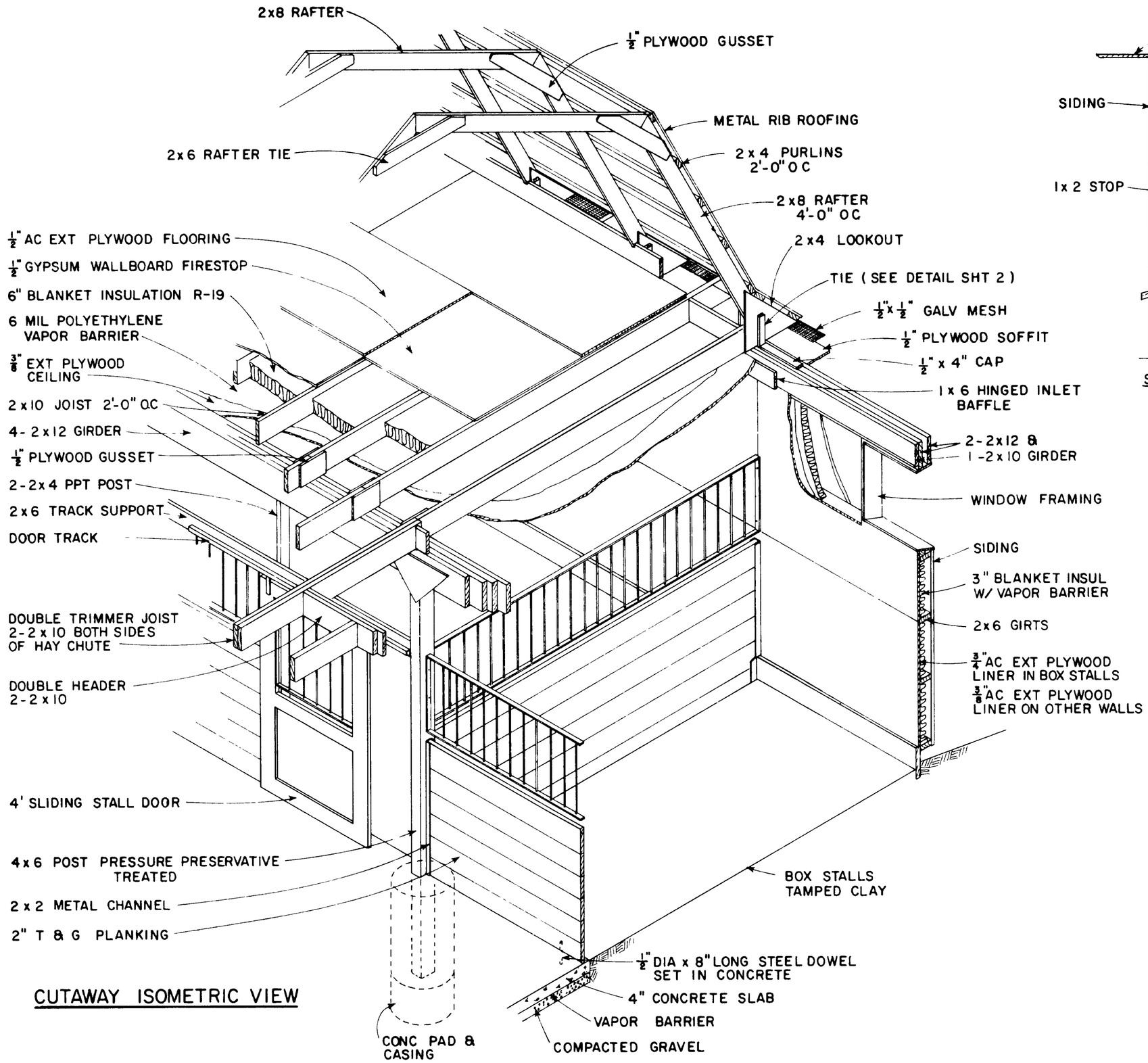

CUTAWAY ISOMETRIC VIEW

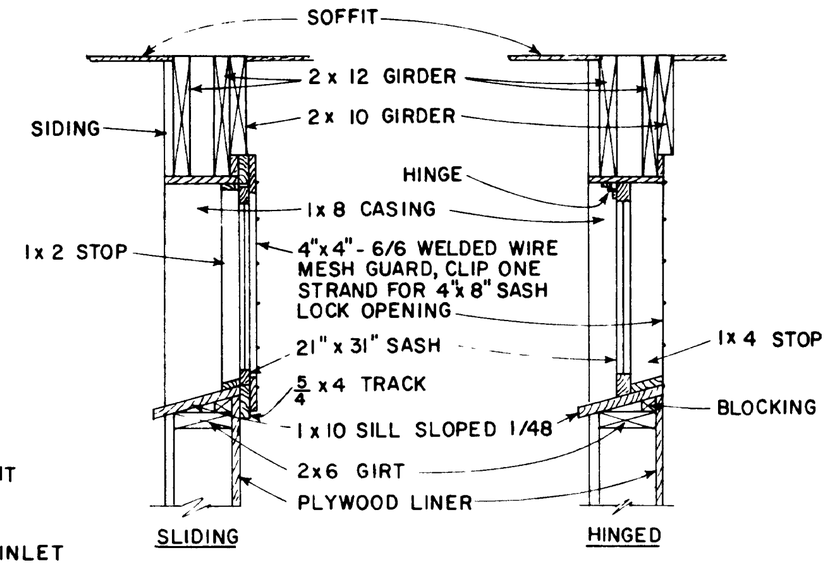

WINDOW DETAIL

SCALE 1/12 0 0.5 1 ft / 0 0.3 m

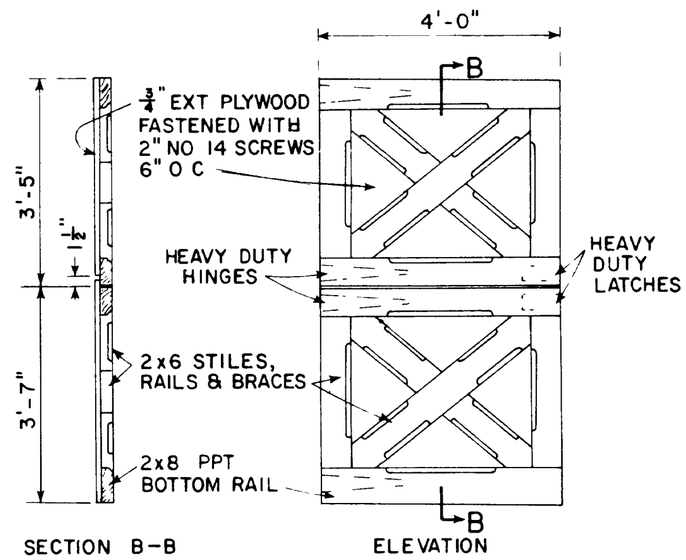

DOOR DETAIL

SCALE 1/24 0 1 2 ft / 0 0.3 0.6 m

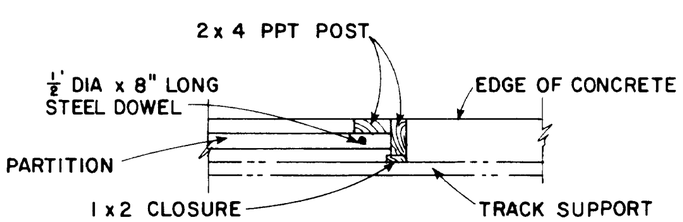

STALL DOOR POST DETAIL

SCALE 1/12 0 0.5 1 ft / 0 0.3m

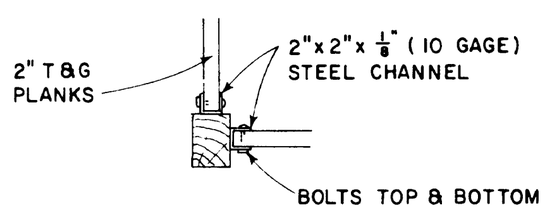

STALL PARTITION ANCHOR

SCALE 1/12 0 0.5 1 ft / 0 0.3m

COOPERATIVE EXTENSION WORK IN AGRICULTURE AND HOME ECONOMICS

AND

UNITED STATES DEPARTMENT OF AGRICULTURE COOPERATING

HORSE BARN-26'x48' GAMBREL ROOF

N.Y. '77	6285	SHEET 3 OF 3

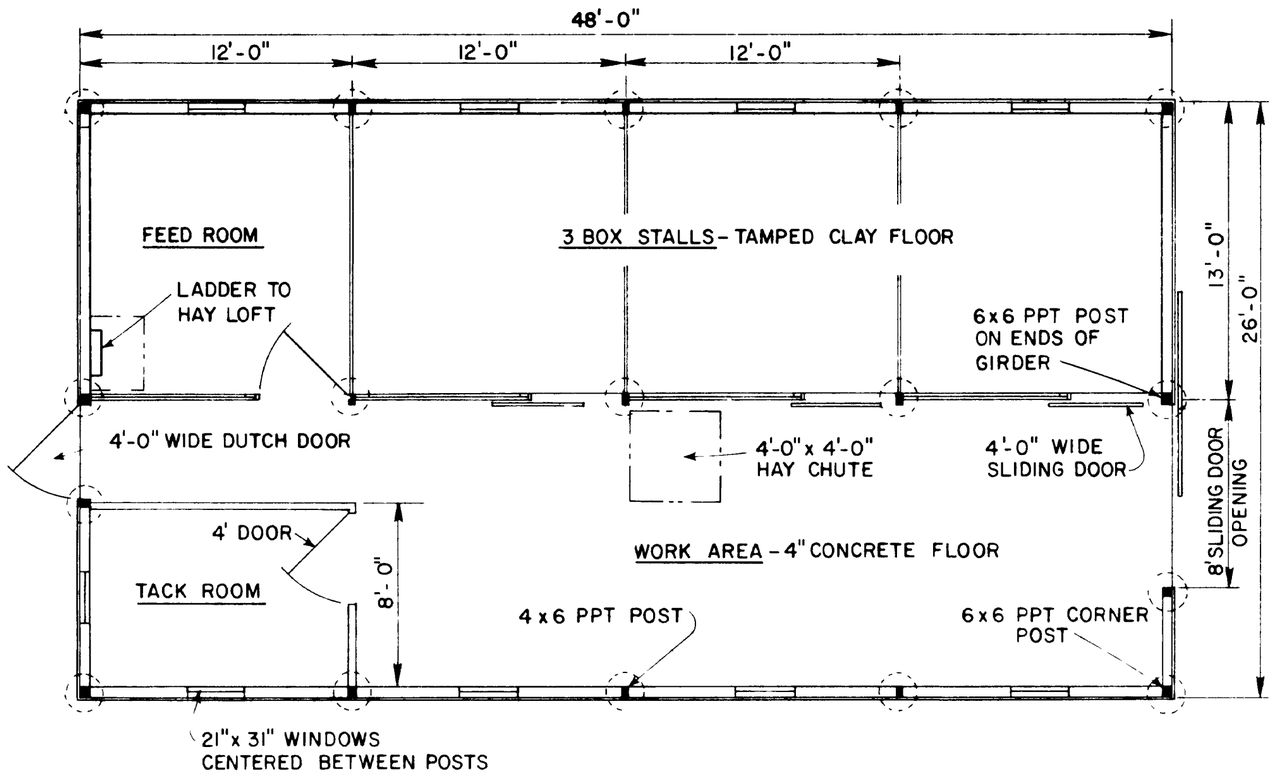

FLOOR PLAN

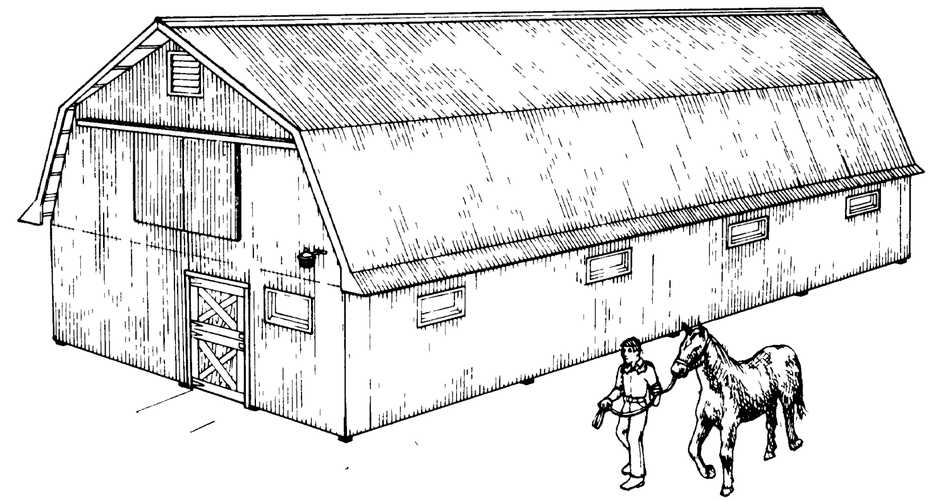

PERSPECTIVE

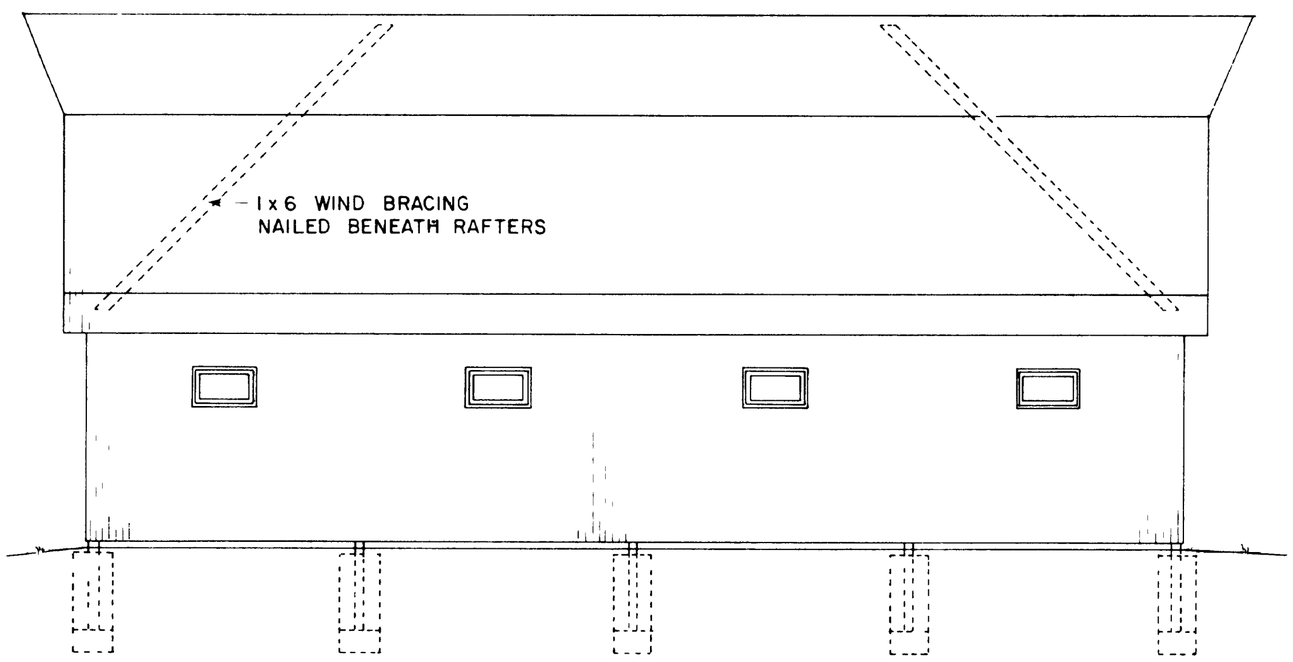

SIDE ELEVATION

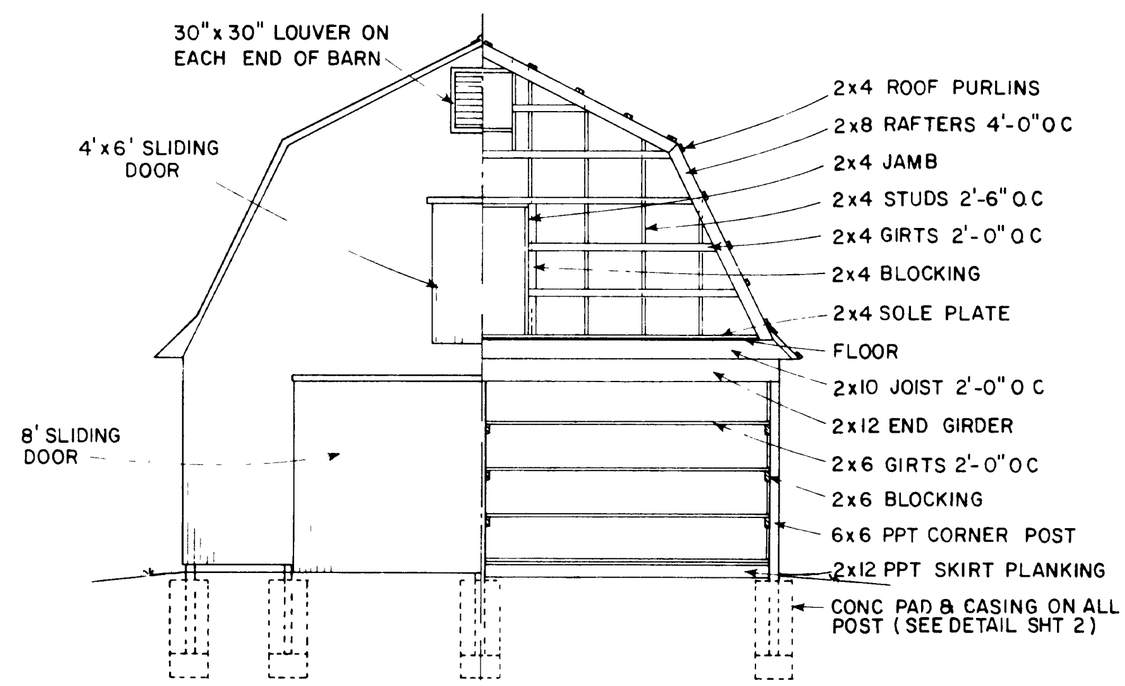

END ELEVATION & FRAMING

NOTES

1) ROOF DESIGN LOAD 40 psf
MOW FLOOR DESIGN LOAD 70 psf
LUMBER BENDING STRESS 1500 psi

2) ALL POST & PLANKING IN CONTACT WITH THE GROUND OR MANURE TO BE PRESSURE PRESERVATIVE TREATED (PPT)

NOTE
CONSULT LOCAL HEALTH AND BUILDING CODE AUTHORITIES BEFORE STARTING CONSTRUCTION

BASED ON. CORNELL UNIV PLAN 845

SCALE 1/64 0 1 2 4 6 8 ft / 0 06 12 18 24 m

This plan is modified and extended from Plan No 6024 developed in New Jersey

COOPERATIVE EXTENSION WORK IN AGRICULTURE AND HOME ECONOMICS

AND
UNITED STATES DEPARTMENT OF AGRICULTURE COOPERATING

HORSE BARN-26'x48'
GAMBREL ROOF

N.Y. '77	6285	SHEET 1 OF 3