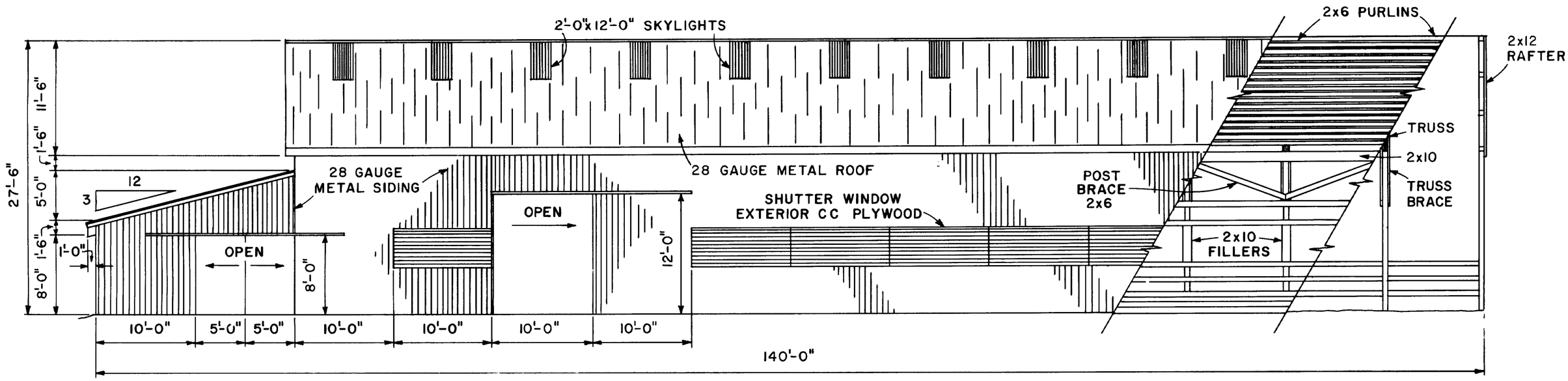

ELEVATION

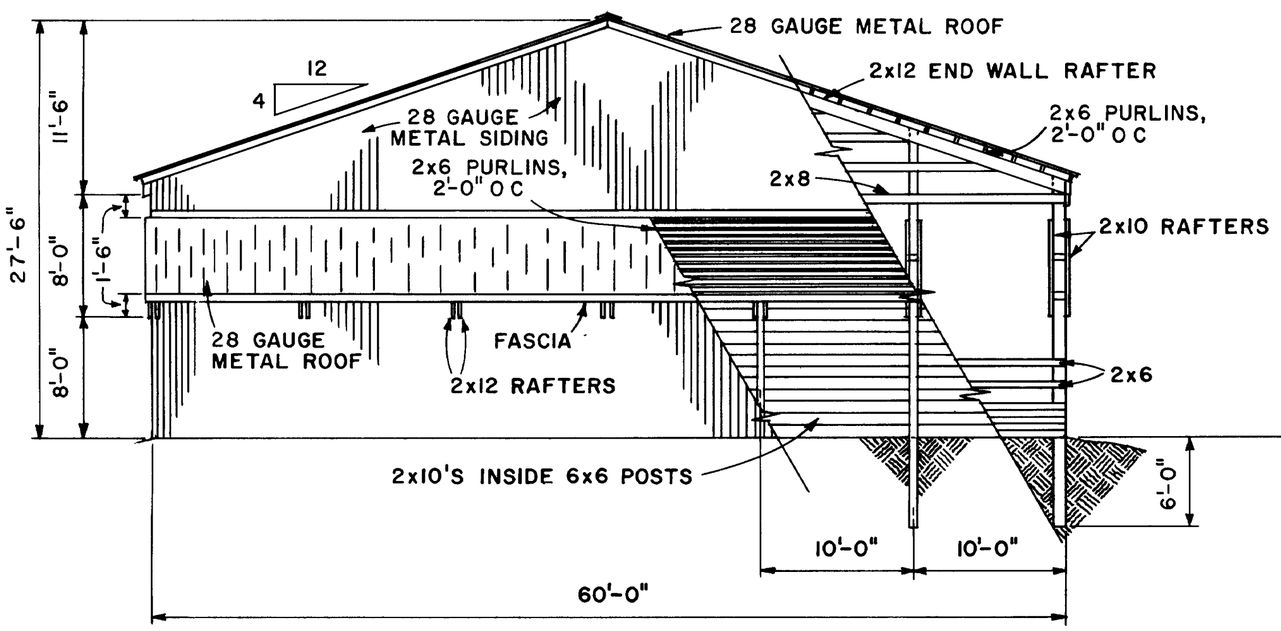

ELEVATION

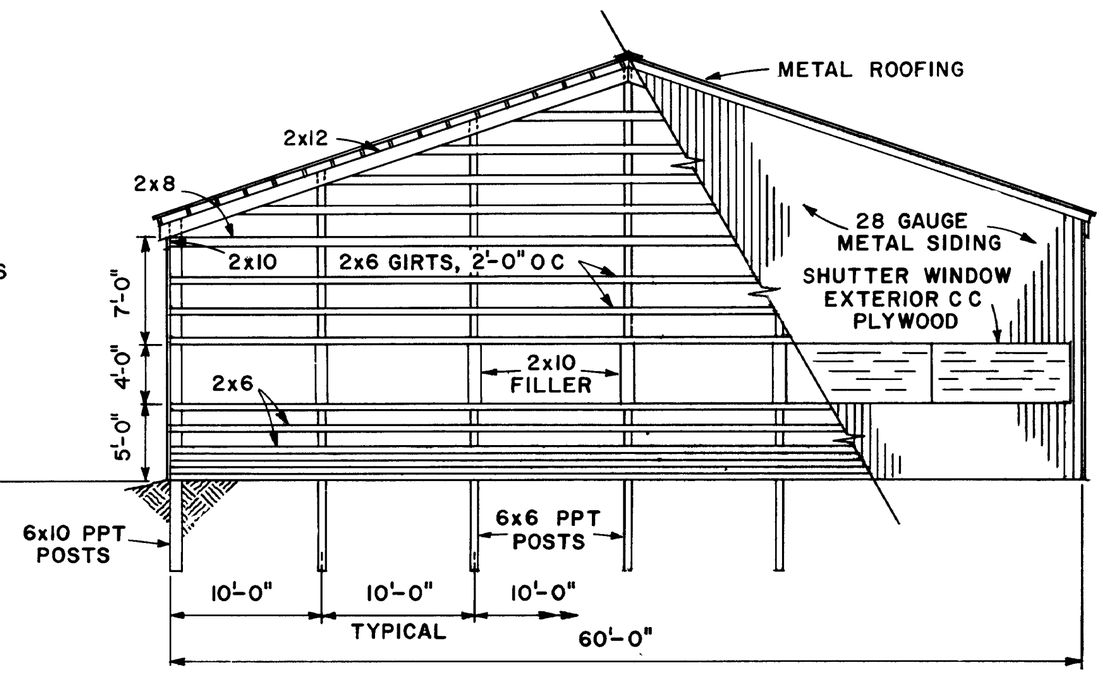

ELEVATION

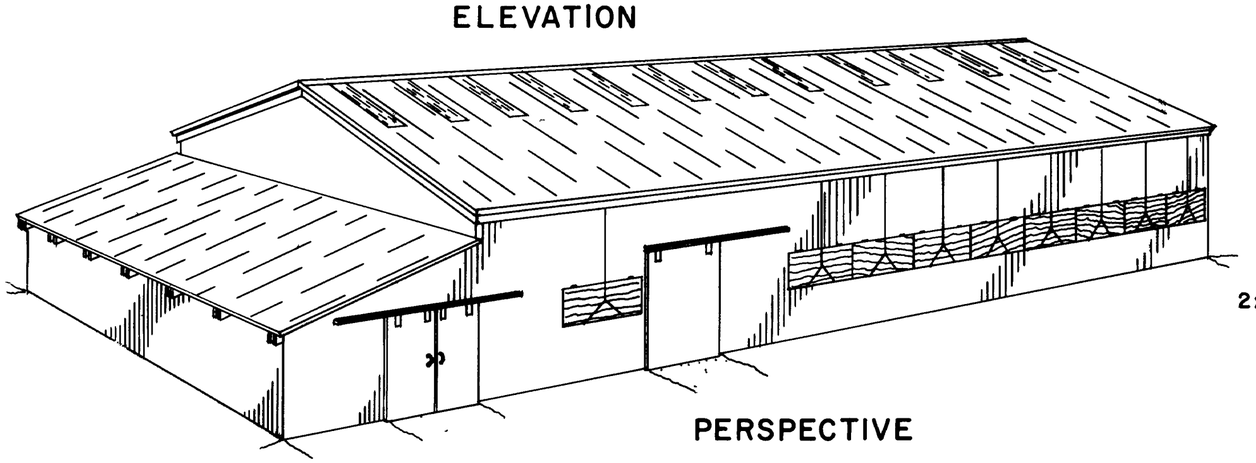

PERSPECTIVE

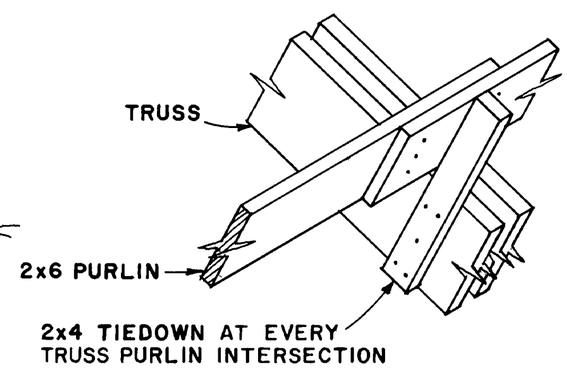

PURLIN LAP & TIEDOWN

NO SCALE

0 1' 3' 8' 12'
12" 2' 4'

SCALE 1/8"=1'-0" UNLESS OTHERWISE NOTED

COOPERATIVE EXTENSION WORK IN AGRICULTURE AND HOME ECONOMICS

AND

UNITED STATES DEPARTMENT OF AGRICULTURE COOPERATING

HORSE BARN & ARENA

ID. '73	6171	SHEET 2 OF 3

Not Known INACTIVE

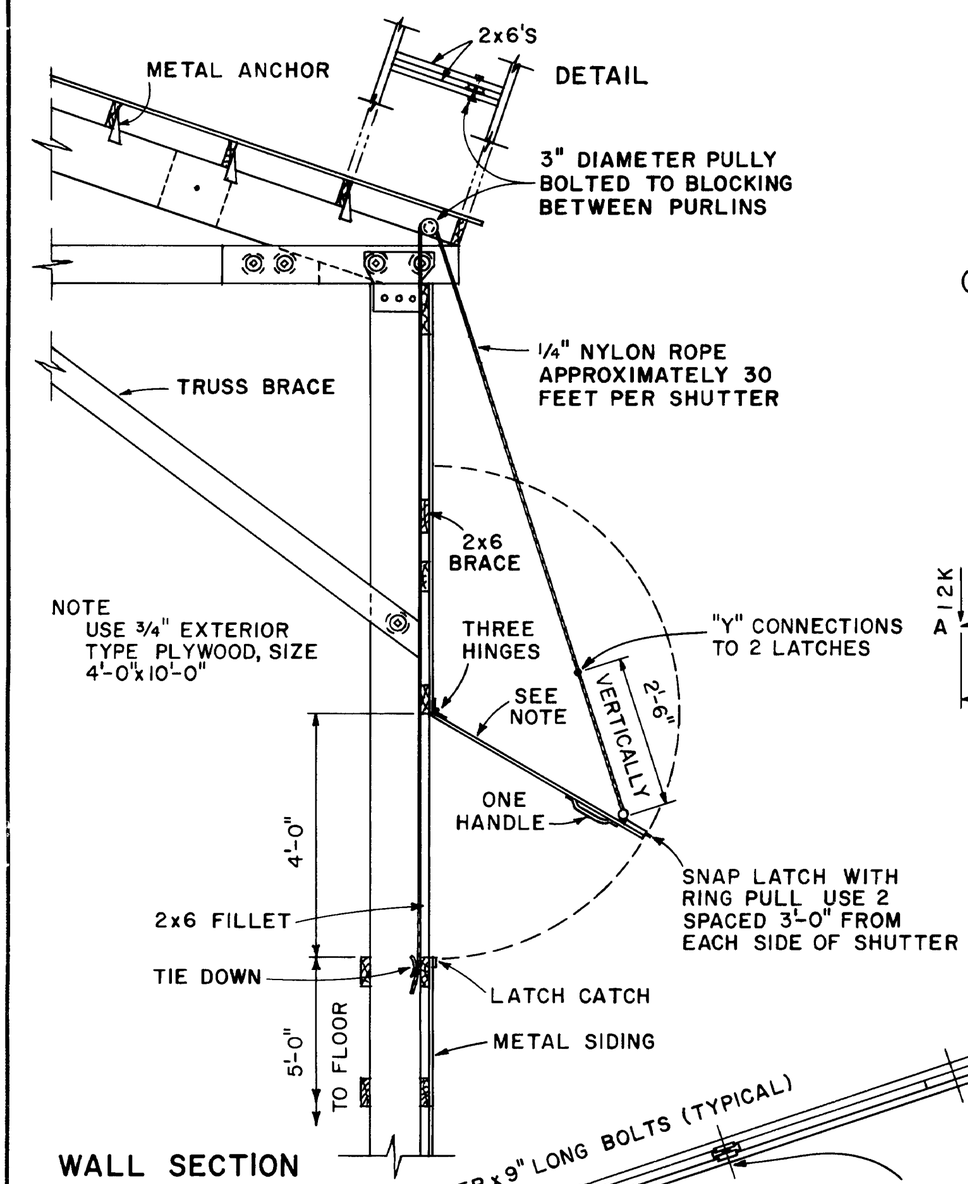

WALL SECTION
SCALE 1/2"=1'-0"

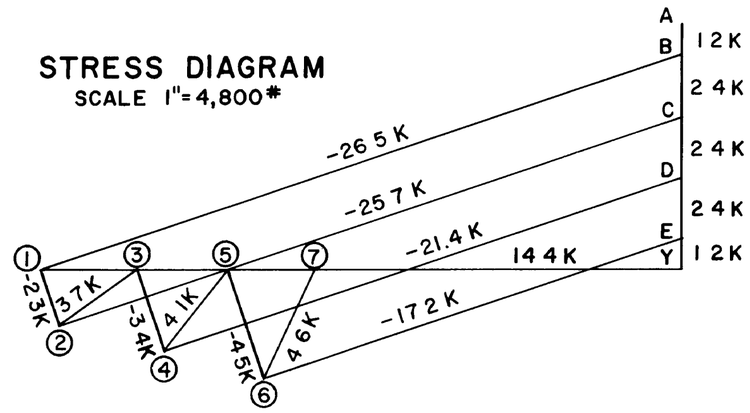

STRESS DIAGRAM
SCALE 1"=4,800#

NOTES
1 TOTAL LOAD, LIVE PLUS DEAD=32 POUNDS PER SQUARE FOOT.
2 TRUSS SPACING 10'-0" O C
3 THE PROPER CAMBER MAY BE INTRODUCED BY RAISING THE LOWER CHORD 1 1/2" AT THE CENTER DURING FABRICATION
4 LUMBER SHALL BE A STRUCTURAL GRADE WITH MINIMUM ALLOWABLE WORKING STRESSES IN POUNDS PER SQUARE INCH AS FOLLOWS
800 PSI COMPRESSION PARALLEL TO THE GRAIN
1,200 PSI EXTREME FIBER IN BENDING
1,600,000 PSI MODULUS OF ELASTICITY
5. CONNECTORS
4" DIAMETER SPLIT RINGS
3/4" DIAMETER x 9 1/2" LONG BOLTS & 3" WASHERS UNLESS OTHERWISE SPECIFIED

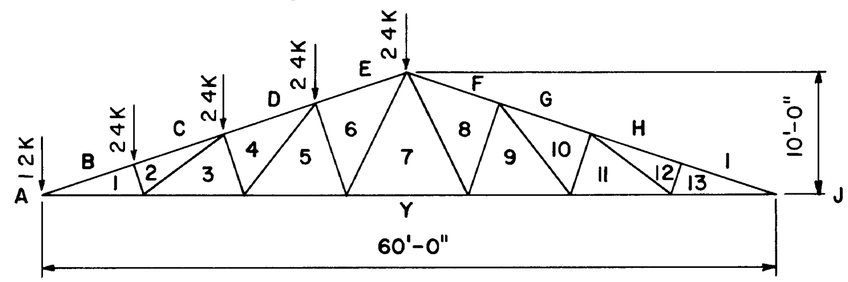

8 EQUAL TOPCHORD PANELS AT 7'-6"
SCALE 1"=10'-0"

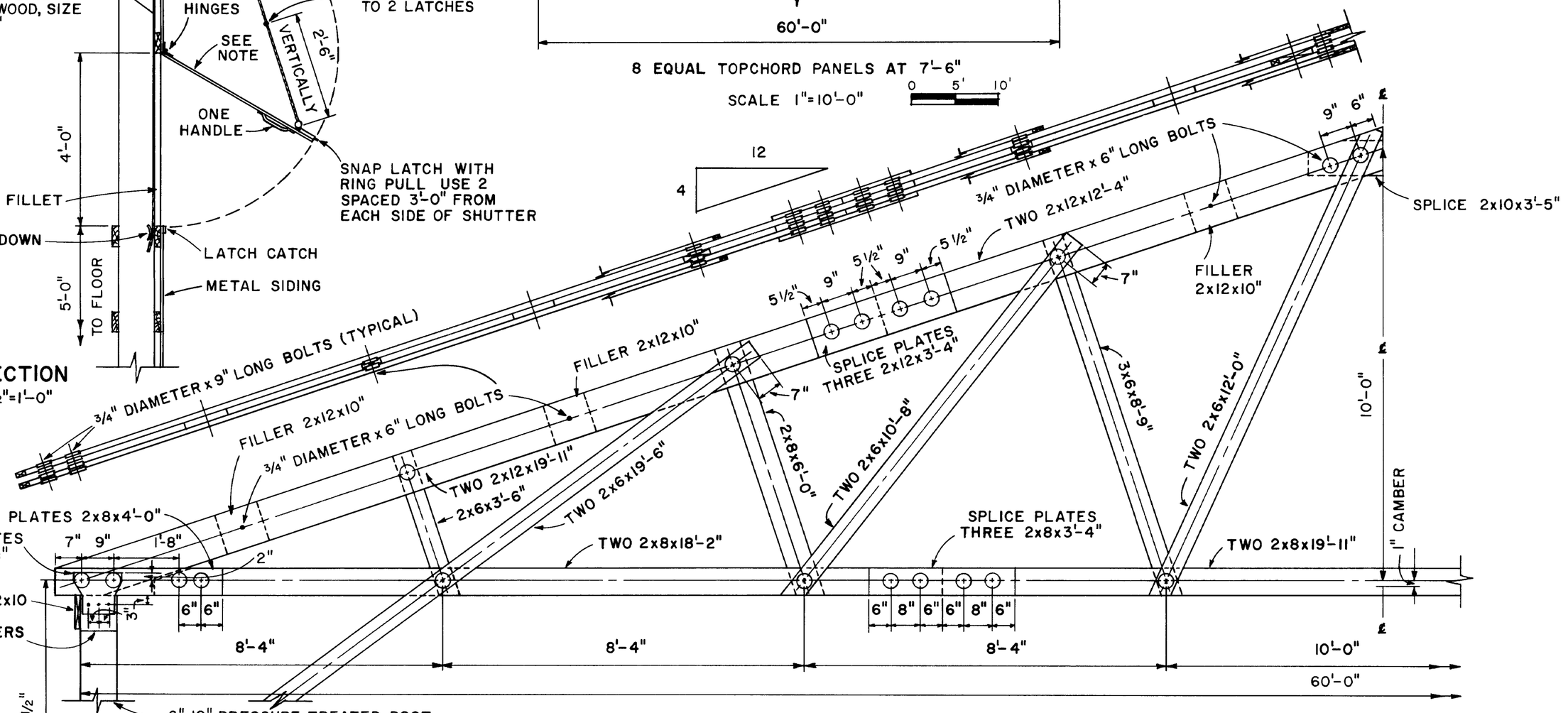

BELGIAN TRUSS
SCALE 1/2"=1'-0"

COOPERATIVE EXTENSION WORK IN AGRICULTURE AND HOME ECONOMICS

AND
UNITED STATES DEPARTMENT OF AGRICULTURE COOPERATING

HORSE BARN & ARENA

ID '73	6171	SHEET 3 OF 3

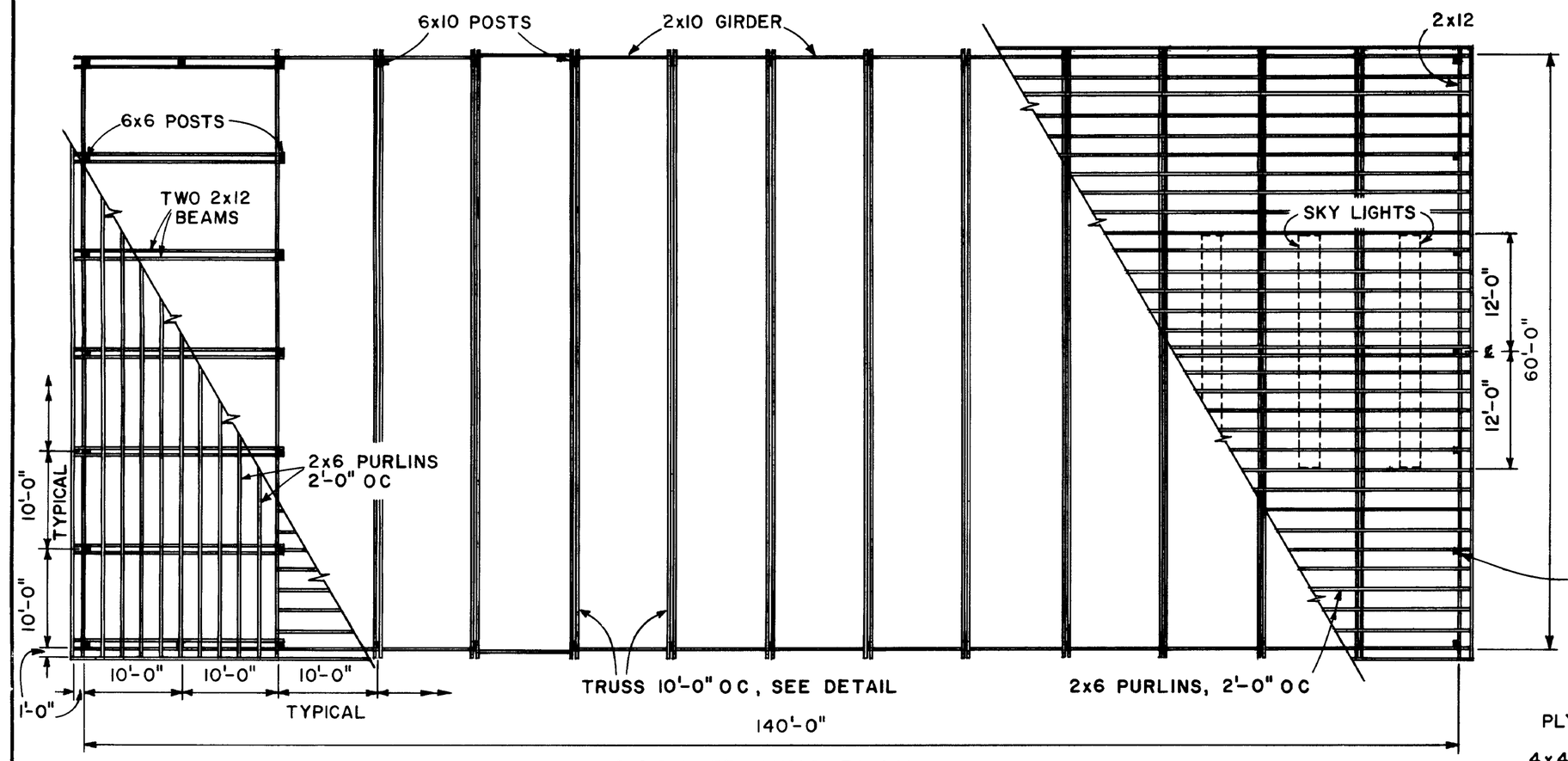

ROOF FRAMING PLAN

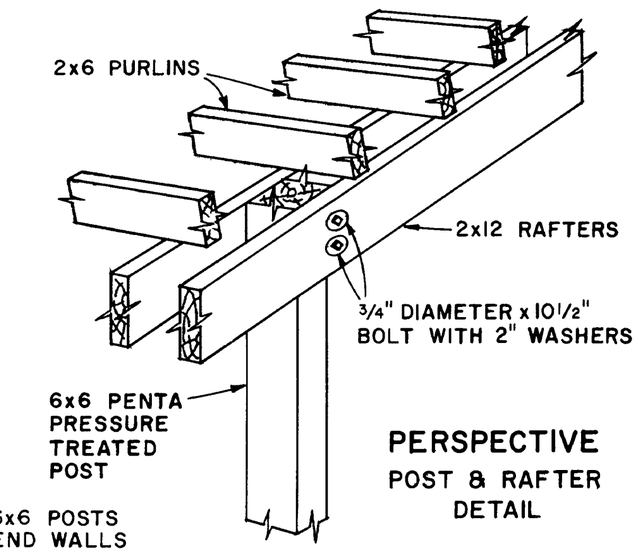

PERSPECTIVE
POST & RAFTER DETAIL

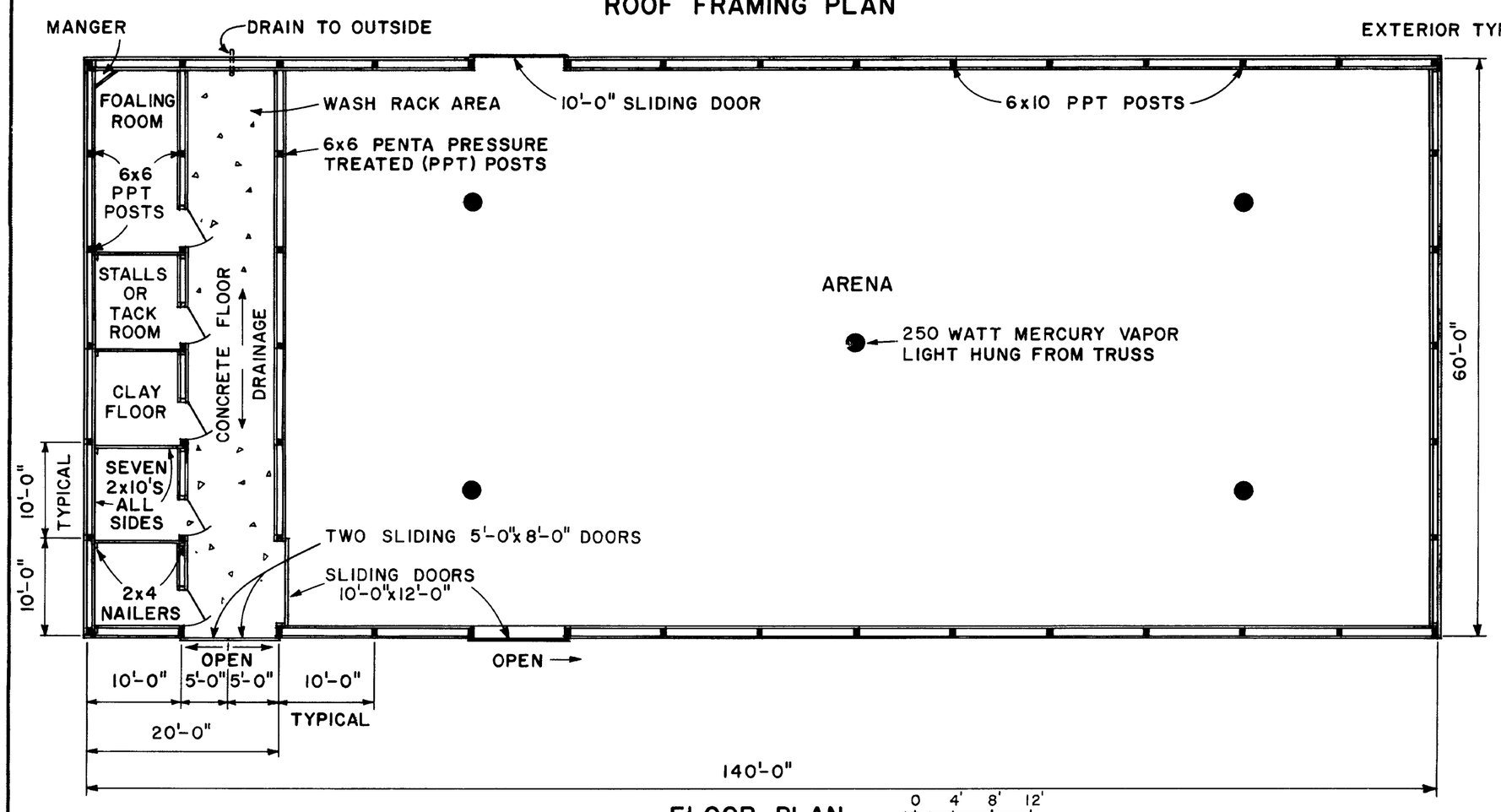

FLOOR PLAN

0 4' 8' 12'
1/2"

BASED ON UNIV OF IDAHO PLAN AE-73-01

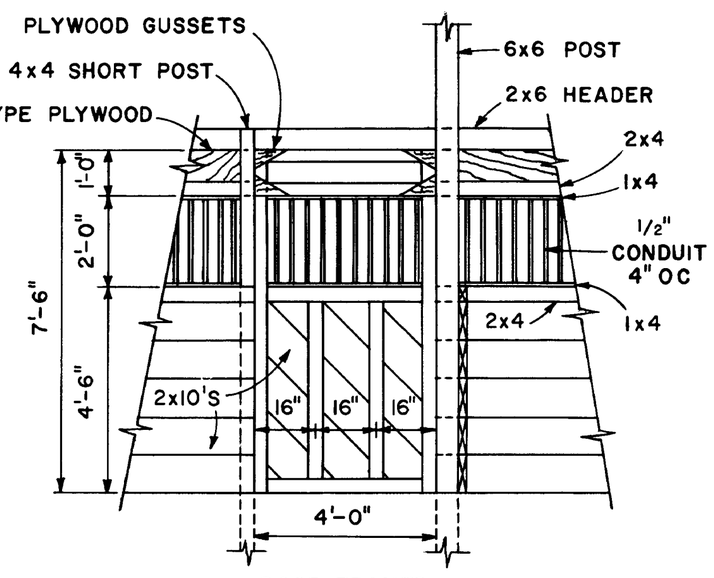

DOOR FRAMED WITH 2x4'S

STALL DOOR DETAIL

SCALE 3/8"=1'-0"

12" 0 1' 2' 3'

SCALE 3/32"=1'-0" UNLESS OTHERWISE NOTED

COOPERATIVE EXTENSION WORK IN
AGRICULTURE AND HOME ECONOMICS

AND
UNITED STATES DEPARTMENT OF AGRICULTURE COOPERATING

HORSE BARN & ARENA

ID	'73	6171	SHEET 1 OF 3

DR BY NJL LG TR BY J G CHK BY MST DATE 1/74