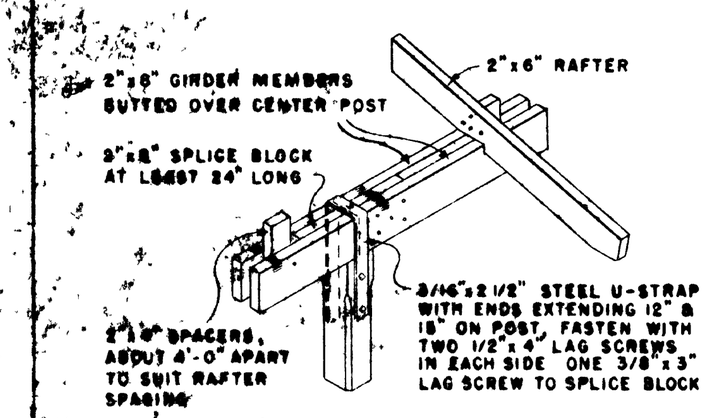

POST, GIRDER & RAFTER DETAIL

THE THREE PART GIRDER IS SIMILAR EXCEPT THE CENTER MEMBER JOINT SHALL BE 18" TO 30" FROM CENTER POST

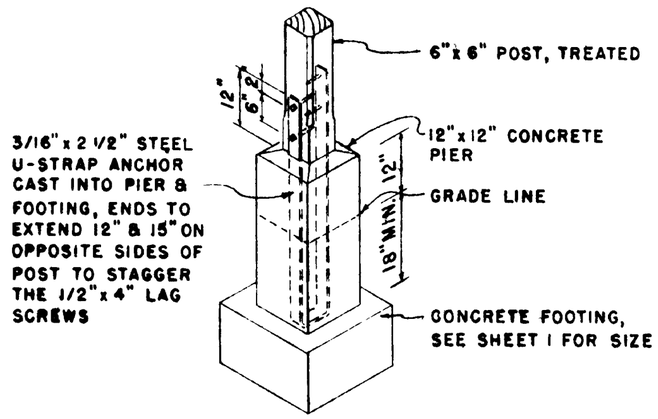

FOOTING, PIER & POST DETAIL

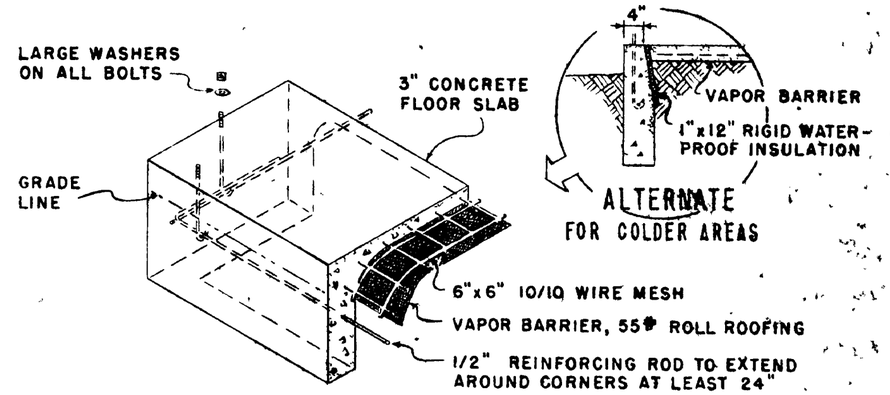

FOUNDATION & FLOOR DETAIL AT CORNER

FOR FEED & TACK ROOMS

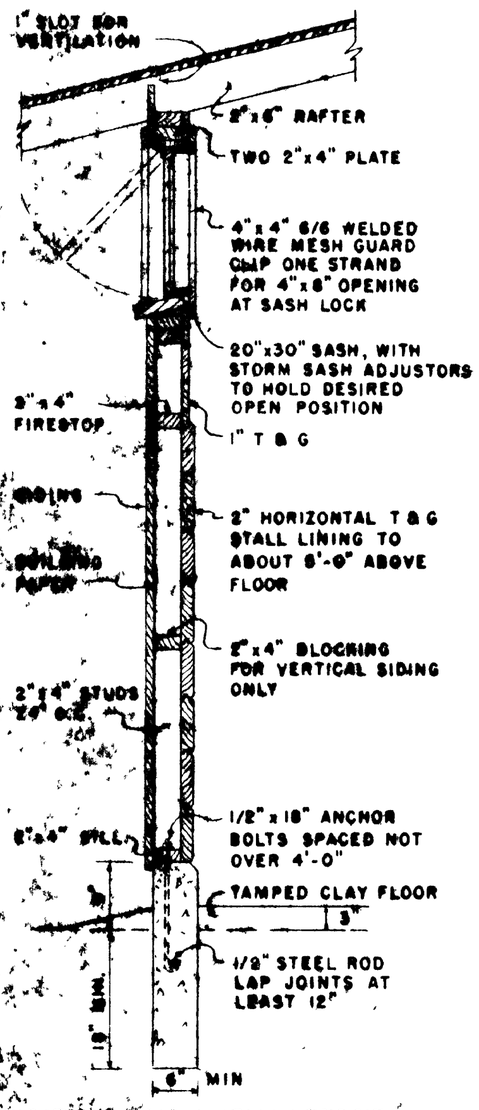

FOUNDATION WALL & STALL WINDOW DETAIL

SCALE 3/4"=1'-0"

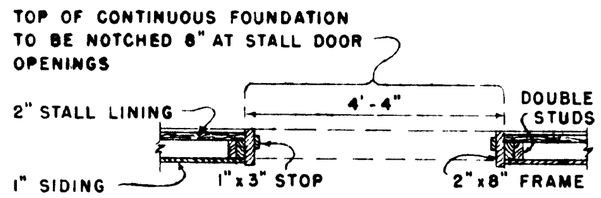

JAMB DETAIL

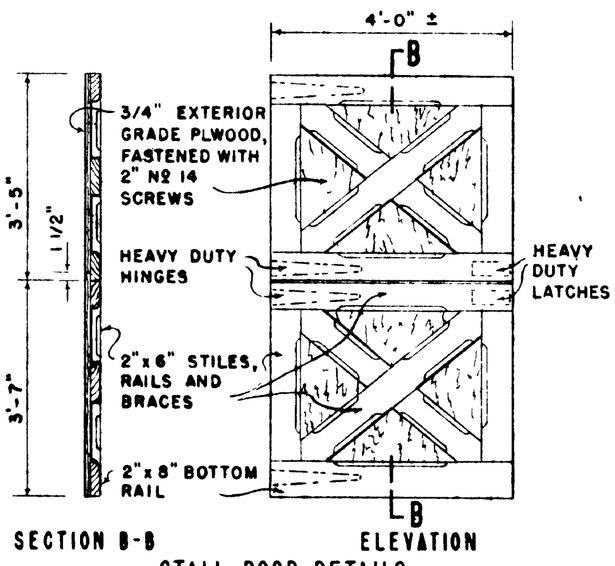

STALL DOOR DETAILS

SCALE 1/2"=1'-0"

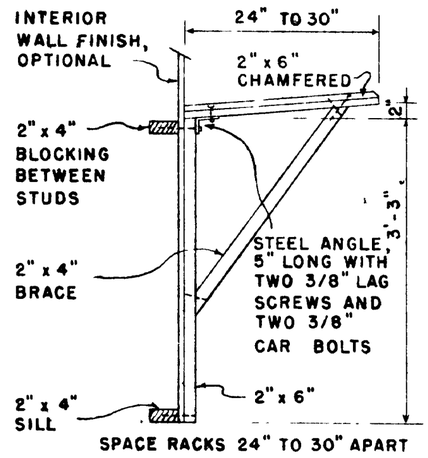

SADDLE RACK

SCALE 3/4"=1'-0"

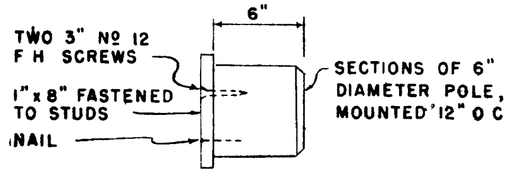

BRIDLE RACK

SCALE 1 1/2"=1'-0"

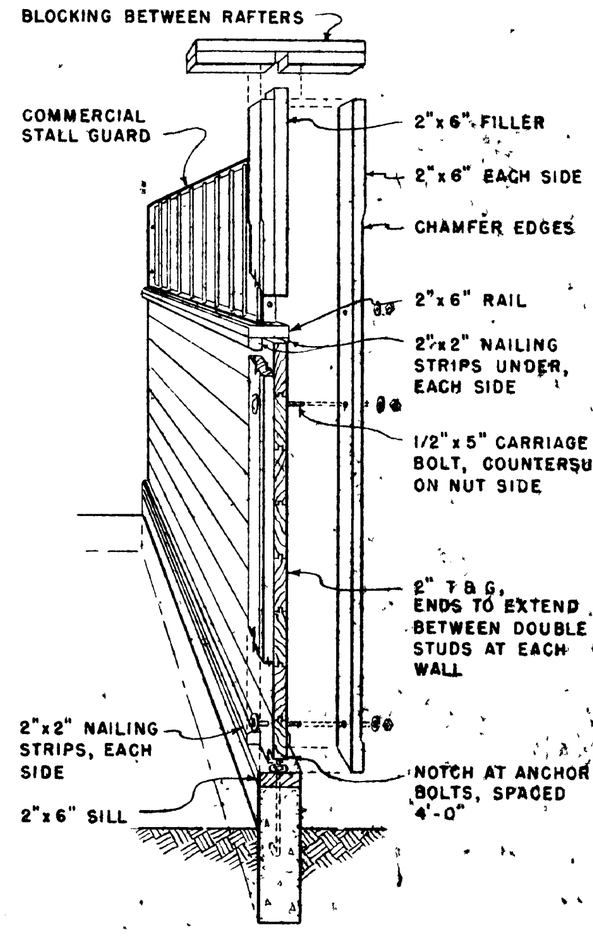

CUTAWAY SECTION STALL PARTITION

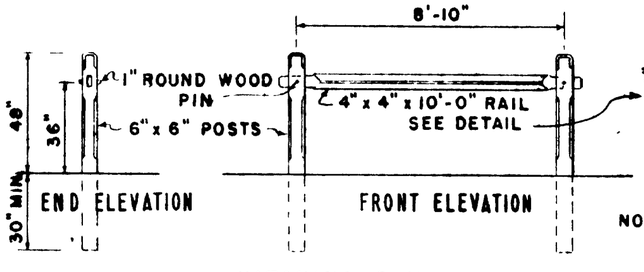

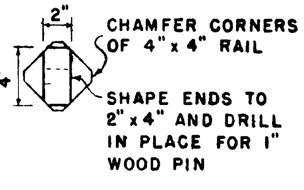

NOTE RAIL & POSTS TO BE TREATED WITH PRESERVATIVE AFTER SHAPING.

HITCHING RAIL

SCALE 1/4"=1'-0"

COOPERATIVE EXTENSION WORK IN AGRICULTURE AND HOME ECONOMICS
DEPARTMENT OF AGRICULTURAL ENGINEERING
UNIVERSITY OF KENTUCKY, LEX., KY.
AND
UNITED STATES DEPARTMENT OF AGRICULTURE COOPERATING

RIDING HORSE BARN

USDA	'57	EX. 5838	SHEET 2 OF 2

REVISED 1972

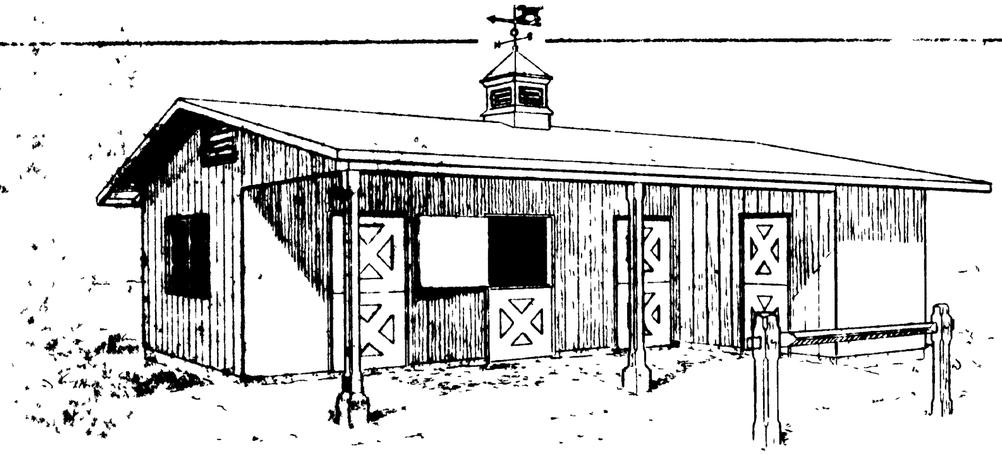

PERSPECTIVE

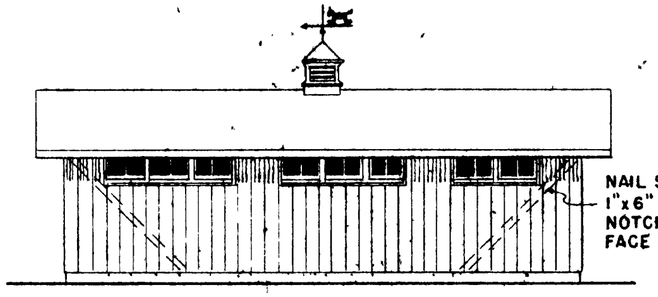

REAR ELEVATION

SCALE 1/8"=1'-0"

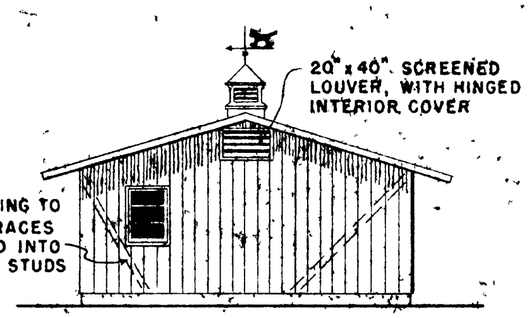

RIGHT END ELEVATION

SCALE 1/8"=1'-0"

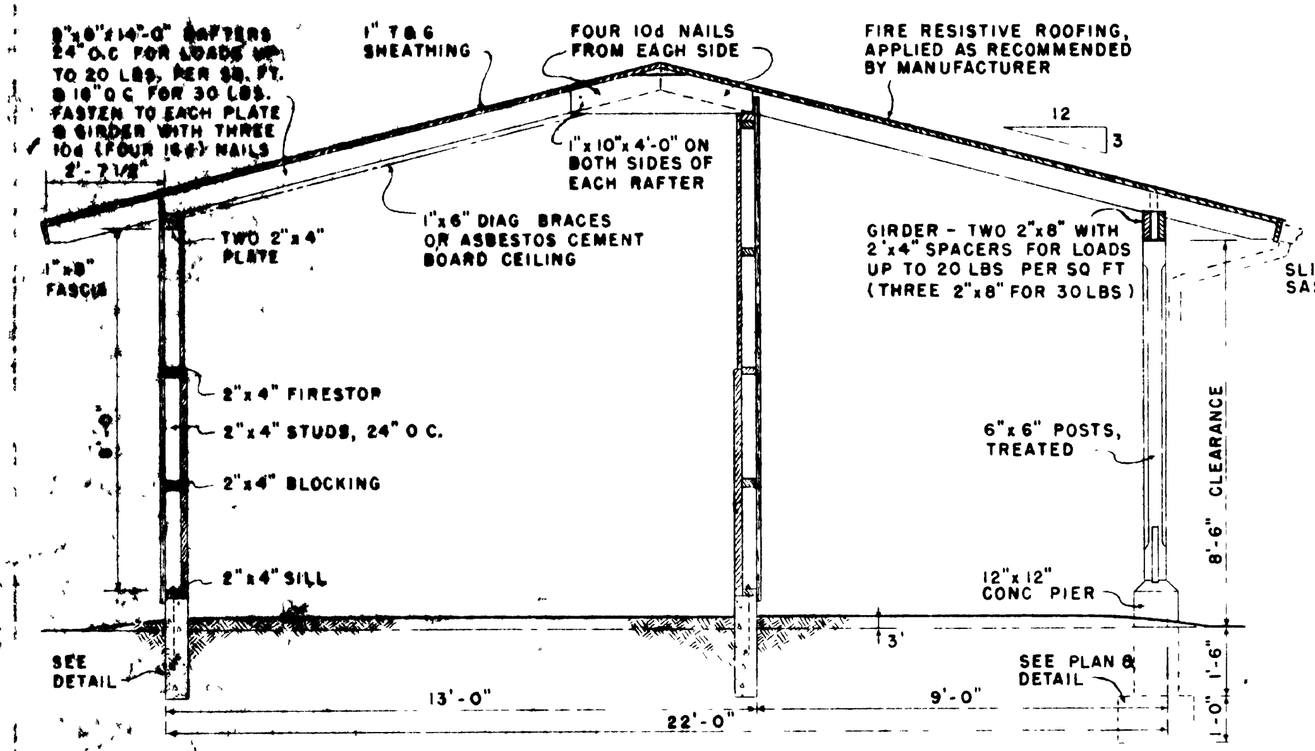

TYPICAL CROSS SECTION A-A

SCALE 3/8"=1'-0"

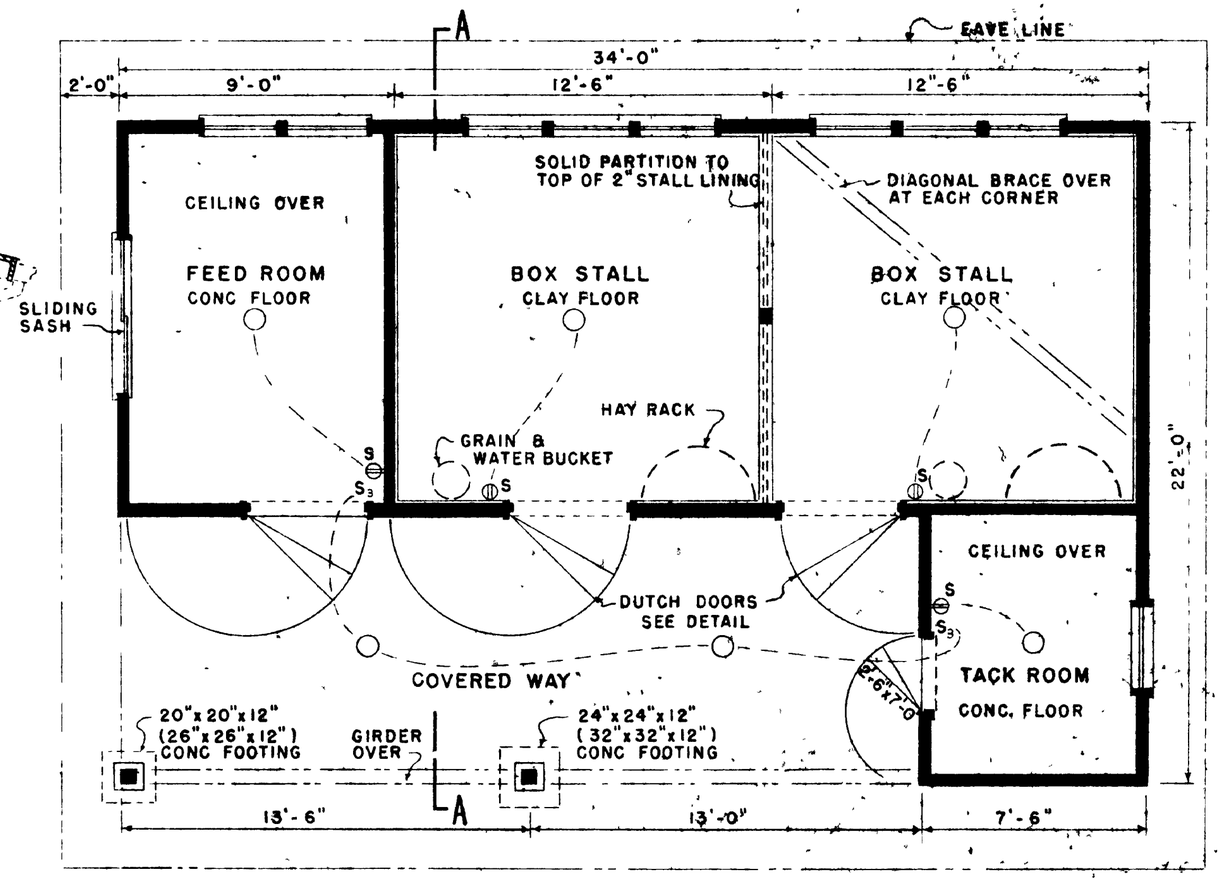

PLAN

SCALE 1/4"=1'-0"

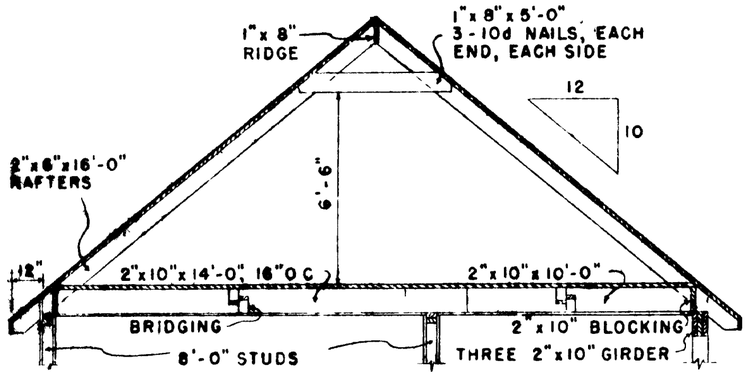

ALTERNATE ROOF

SCALE 1/4"=1'-0"

THIS STEEPLY PITCHED ROOF PROVIDES MOW SPACE FOR STORAGE OF ADDITIONAL FEED & BEDDING, ALSO IS RECOMMENDED FOR USE WHEN NEEDED TO CONFORM TO THE APPEARANCE OF NEARBY BUILDINGS

GENERAL NOTES

THIS BUILDING IS DESIGNED FOR USE IN AREAS WHERE SNOW LOAD DOES NOT EXCEED 30 POUNDS PER SQUARE FOOT AND WIND DOES NOT EXCEED 108 MPH

1 FOR AREAS WHERE THE SNOW LOAD DOES NOT EXCEED 20 LBS PER SQ FT., SPACE RAFTERS 24" O C, USE THE TWO 2"x8" GIRDER

2 FOR SNOW LOADS UP TO 30 LBS PER SQ. FT, SPACE RAFTERS 16" O C. AND USE A THREE 2"x8" GIRDER.

3 REGARDLESS OF SNOW LOAD, IF THE AREA IS SUBJECT TO WINDS OF HURRICANE FORCE, OVER 76 MPH, USE THE THREE 2"x8" GIRDER AND THE FASTENINGS AND PIER FOOTINGS SHOWN IN PARENTHESIS (---)

4 STALL WINDOWS
HOT CLIMATES ..USE THREE SASH, AS SHOWN
MODERATE " " TWO "
COLD " " ONE "

5 FOUNDATION WALLS AND PIER FOOTINGS MUST BE DEEP ENOUGH TO BEAR ON SOLID GROUND, BELOW FROST LINE

NOTE:

IF MOW IS USED, THE SMALLER ROOM AT RIGHT MAY BE USED FOR FEED STORAGE AND THE LARGER ROOM AT LEFT FOR TACK AND BUNK ROOM

COOPERATIVE EXTENSION WORK IN
AGRICULTURE AND HOME ECONOMICS
DEPARTMENT OF AGRICULTURAL ENGINEERING
UNIVERSITY OF KENTUCKY, LEX., KY.
AND
UNITED STATES DEPARTMENT OF AGRICULTURE COOPERATING

RIDING HORSE BARN

USDA '57	EX 5838	SHEET 1 OF 2

REVIEWED 1972