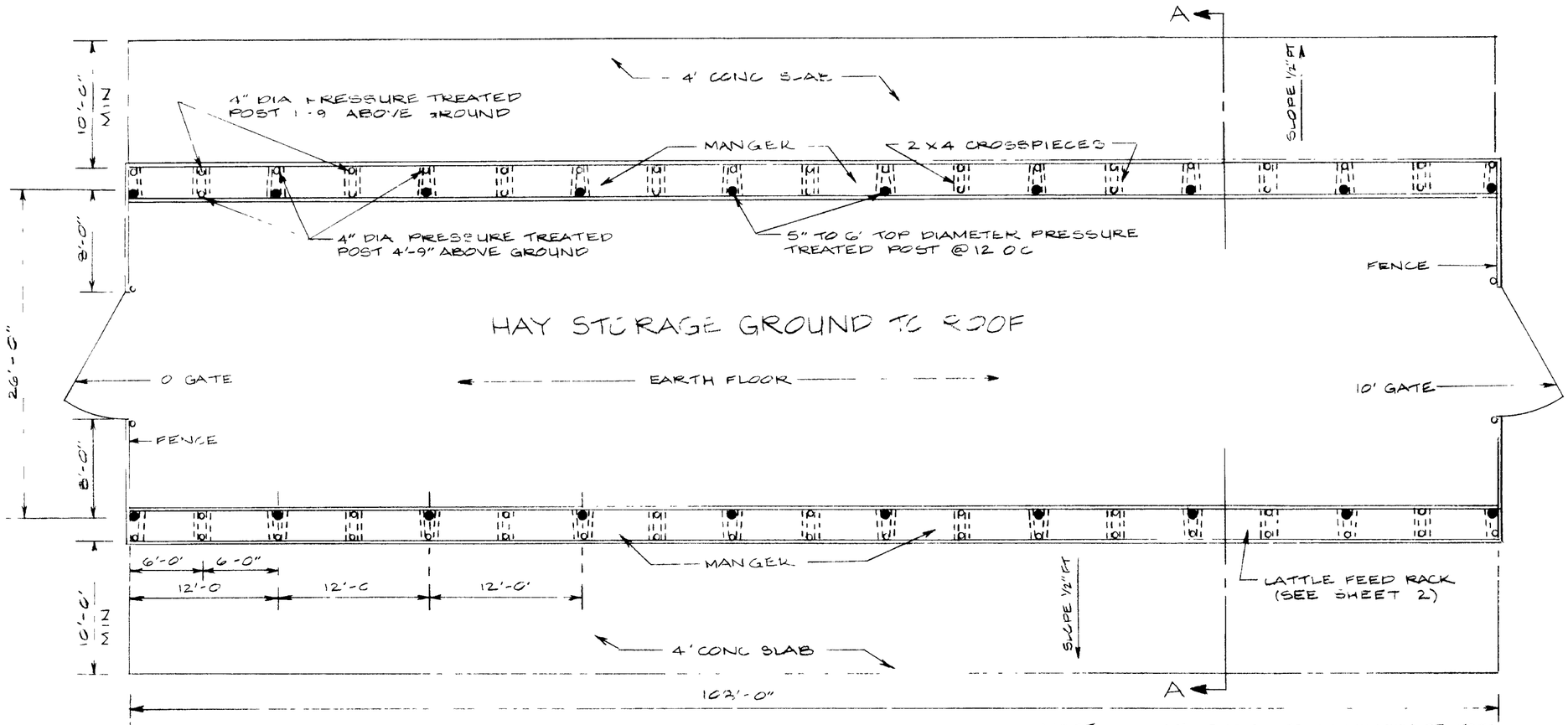

FLOOR PLAN

SCALE: 1/8" = 1'-0"

NOTE ADJUST LENGTH TO ACCOMODATE TOTAL HERD, PROVIDING 24' EACH SIDE PER COW FOR "LIMITED QUANTITY" FEEDING OR 6" ON EACH IF FREE CHOICE FEEDING

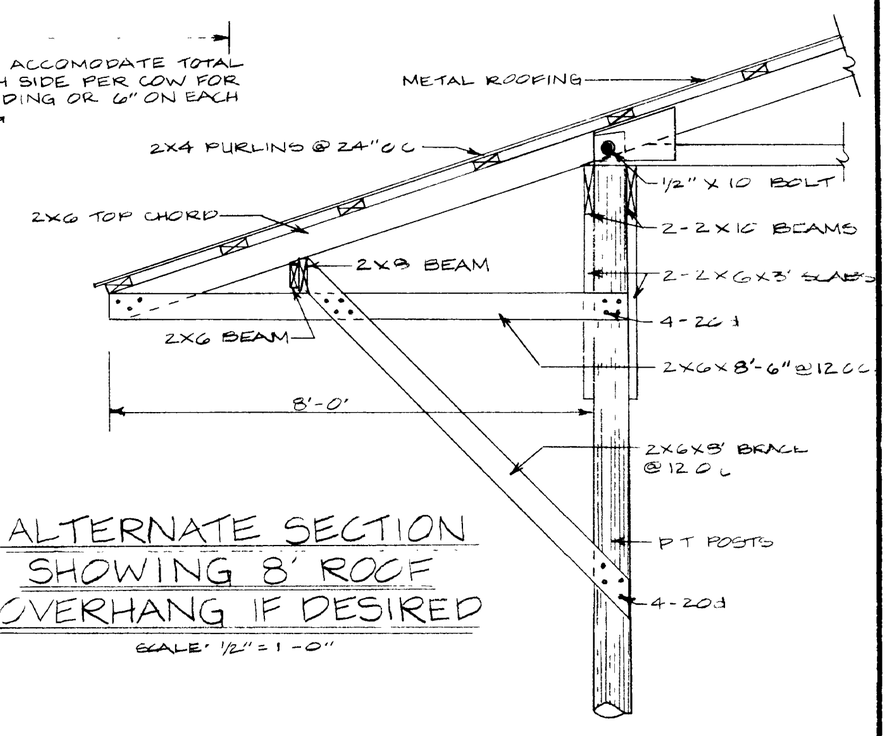

ALTERNATE SECTION SHOWING 8' ROOF OVERHANG IF DESIRED

SCALE: 1/2" = 1'-0"

NOTE
SEE ALTERNATE SECTION AT LOWER RIGHT FOR 8' OVERHANG

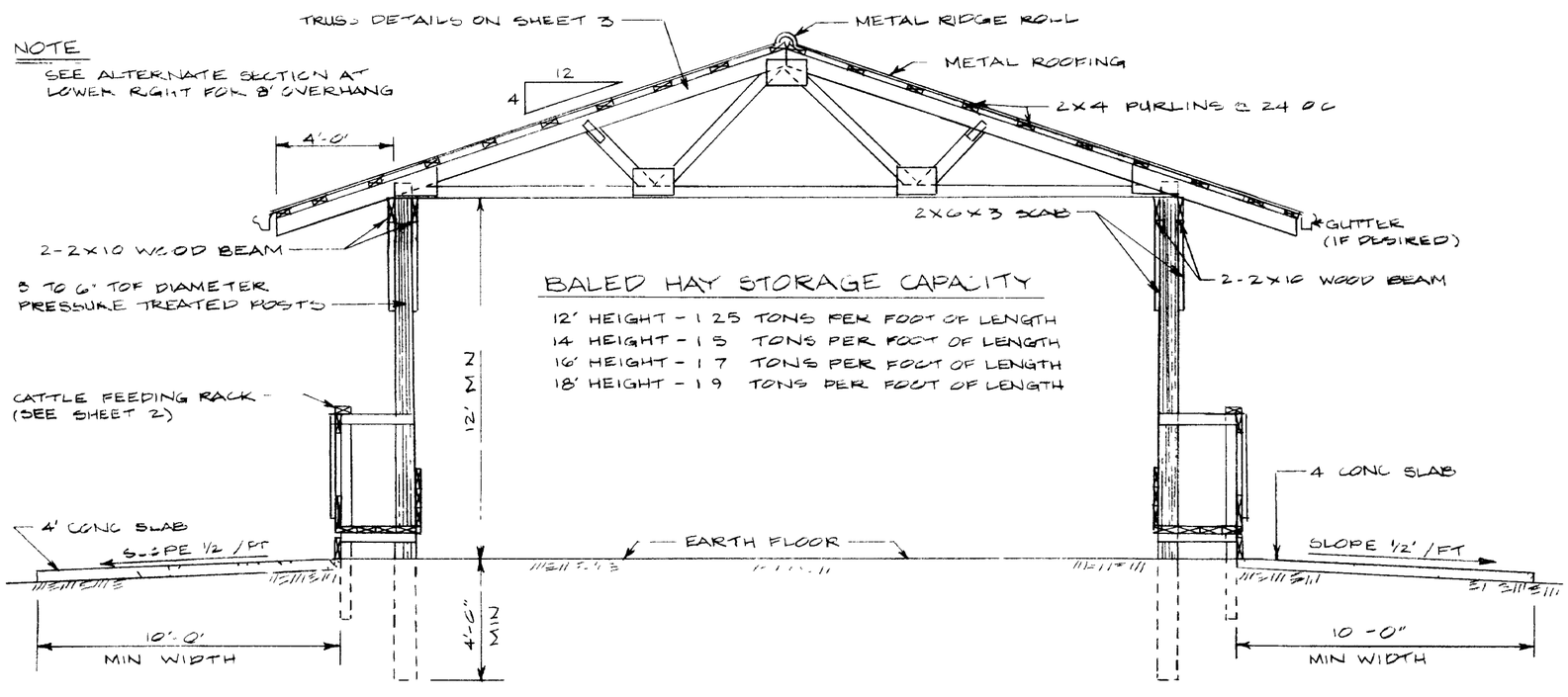

BALED HAY STORAGE CAPACITY

12' HEIGHT - 1.25 TONS PER FOOT OF LENGTH
14 HEIGHT - 1.5 TONS PER FOOT OF LENGTH
16' HEIGHT - 1.7 TONS PER FOOT OF LENGTH
18' HEIGHT - 1.9 TONS PER FOOT OF LENGTH

CROSS SECTION A-A

SCALE 1/4 = 1'-0

HAY STORAGE AND FEEDING BARN

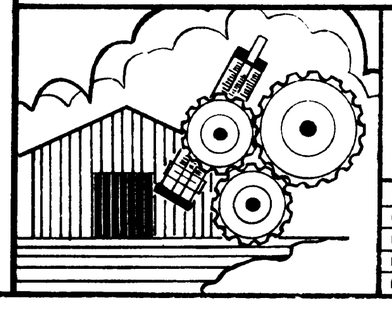

COOPERATIVE EXTENSION SERVICE
AGRICULTURE AND HOME ECONOMICS
DEPARTMENT OF AGRICULTURAL ENGINEERING
COLLEGE OF AGRICULTURE
UNIVERSITY OF KENTUCKY
AND
U.S DEPARTMENT OF AGRICULTURE COOPERATING

DESIGNED BY G T J B B	SHEET 1 OF 3
CHECKED BY	PLAN NUMBER
DRAWN BY S ELLIOTT	KY. II. 731-2
DATE OCT 1976	
REVISIONS JAN 1986	

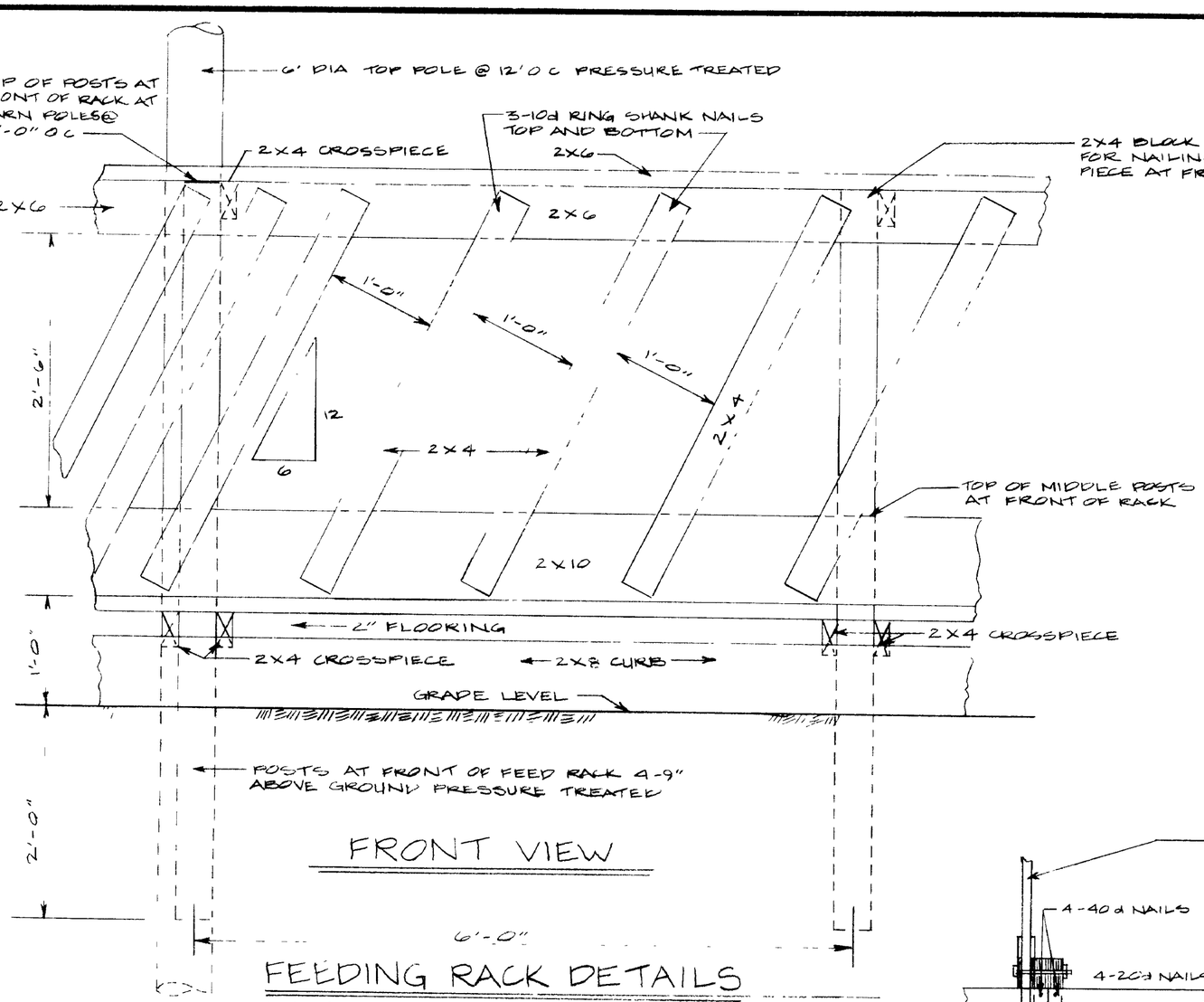

FRONT VIEW

FEEDING RACK DETAILS

SCALE: 1" = 1'-0"

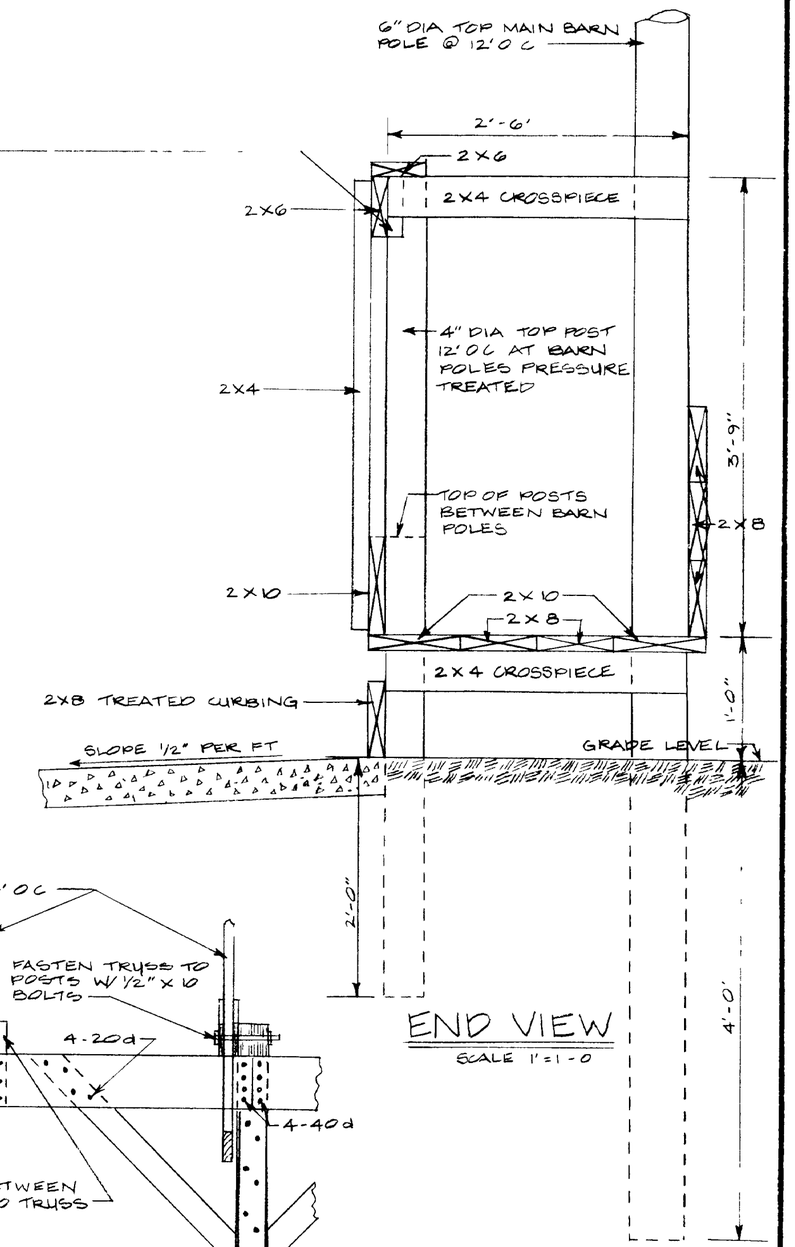

END VIEW

SCALE 1" = 1'-0

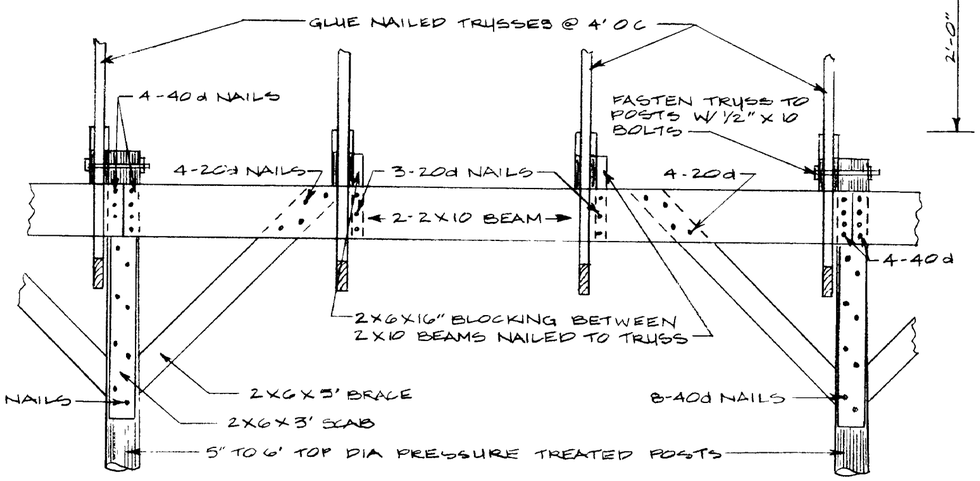

DETAIL OF BRACING AT POST AND RAFTERS

SCALE 1/2" = 1'-0"

NOTE
FOR OTHER TYPES OF FEEDING RACKS SEE PLAN NO 5837

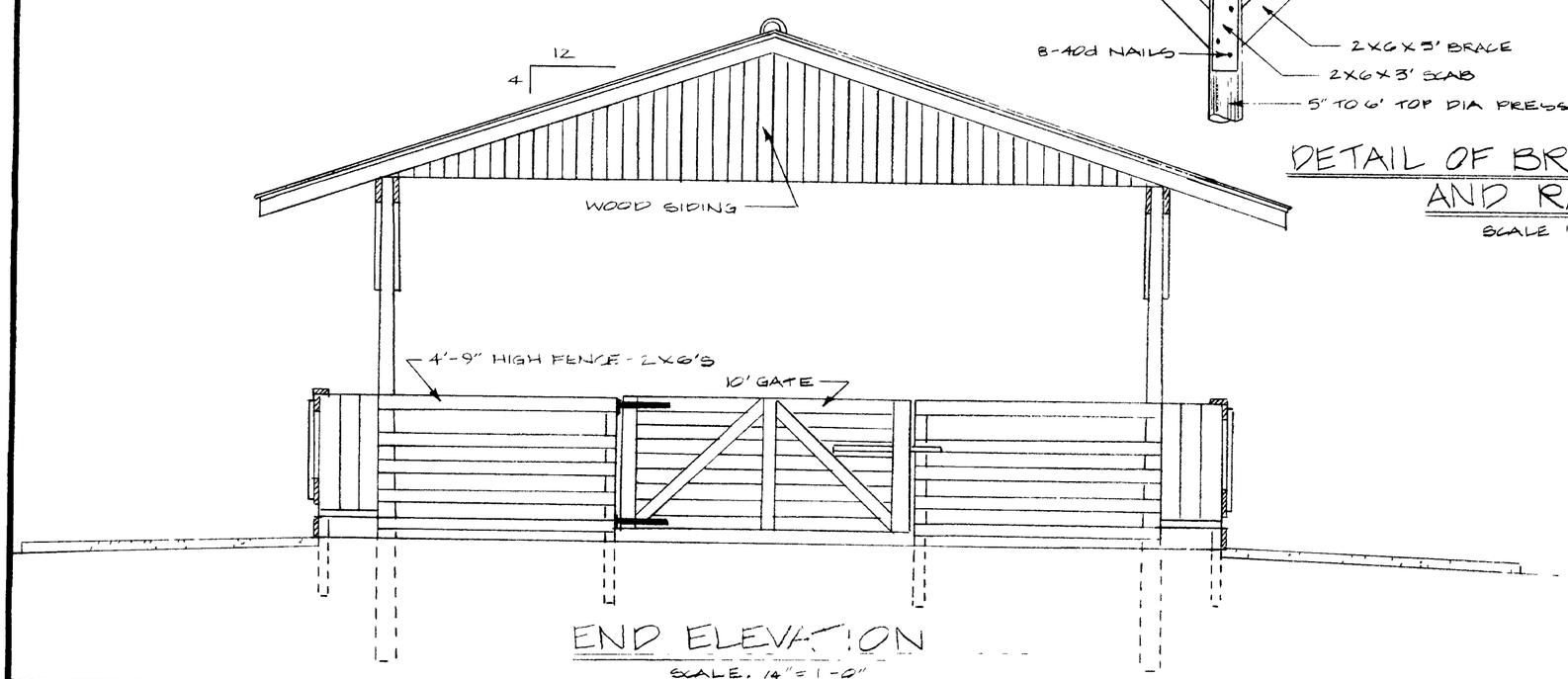

END ELEVATION

SCALE: 1/4" = 1'-0"

HAY STORAGE AND FEEDING BARN

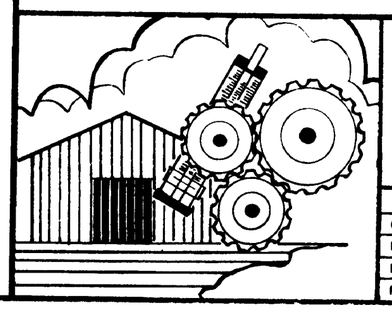

COOPERATIVE EXTENSION SERVICE
AGRICULTURE AND HOME ECONOMICS
DEPARTMENT OF AGRICULTURAL ENGINEERING
COLLEGE OF AGRICULTURE
UNIVERSITY OF KENTUCKY
AND
U S DEPARTMENT OF AGRICULTURE COOPERATING

DESIGNED BY GT & J B B	SHEET 2 OF 3
CHECKED BY	PLAN NUMBER
DRAWN BY S ELLIOTT	KY. II. 731-2
DATE JUNE 1968	
REVISIONS JAN 1986	

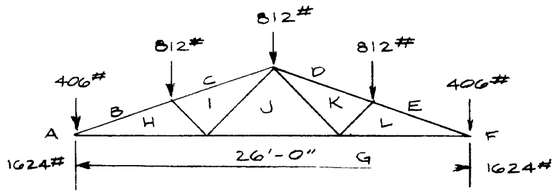

LOADING DIAGRAM

SCALE. 1/8" = 1'-0"

LIST OF MATERIALS			
MEMBER	NO.	SIZE	BD FT
TOP CHORD	2	2 x 6' x 18'0"	36
LOWER CHORD	1	2" x 4 x 12.0	
LOWER CHORD	1	2" x 4' x 14.0'	17
LONG DIAGONAL	2	2' x 4' x 6.6"	9
SHORT DIAGONAL	2	2" x 4' x 3.3'	6
			68
6d BOX NAILS	1#		
PLYWOOD GUSSETS	1	5/8 x 4' x 4"	16 SQ FT
CASEIN OR RESORCINOL RESIN GLUE	1#		

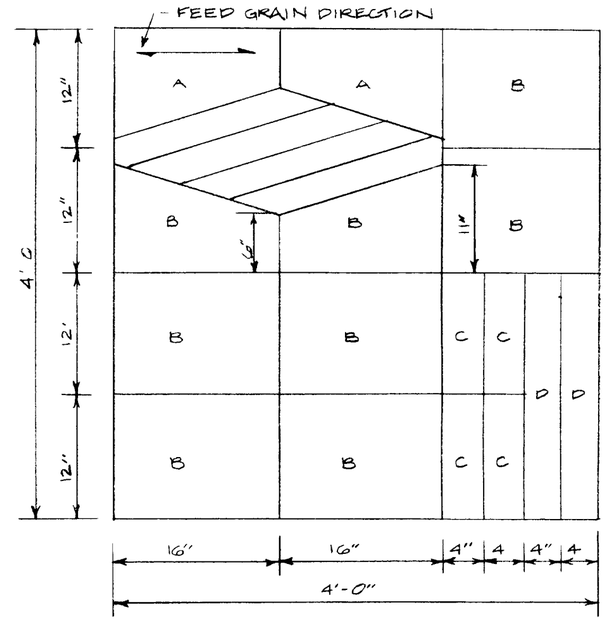

CUTTING DIAGRAM FOR GUSSET PLATES

SCALE: 1" = 1'-0"

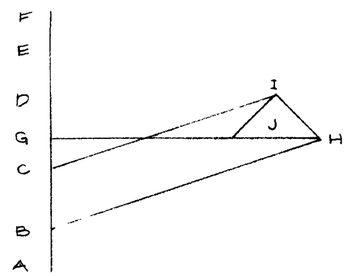

STRESS DIAGRAM

SCALE: 1/16" = 100#

TRUSS SPACING 4'-0" O.C.
DEAD LOAD + LIVE LOAD = 25 psf

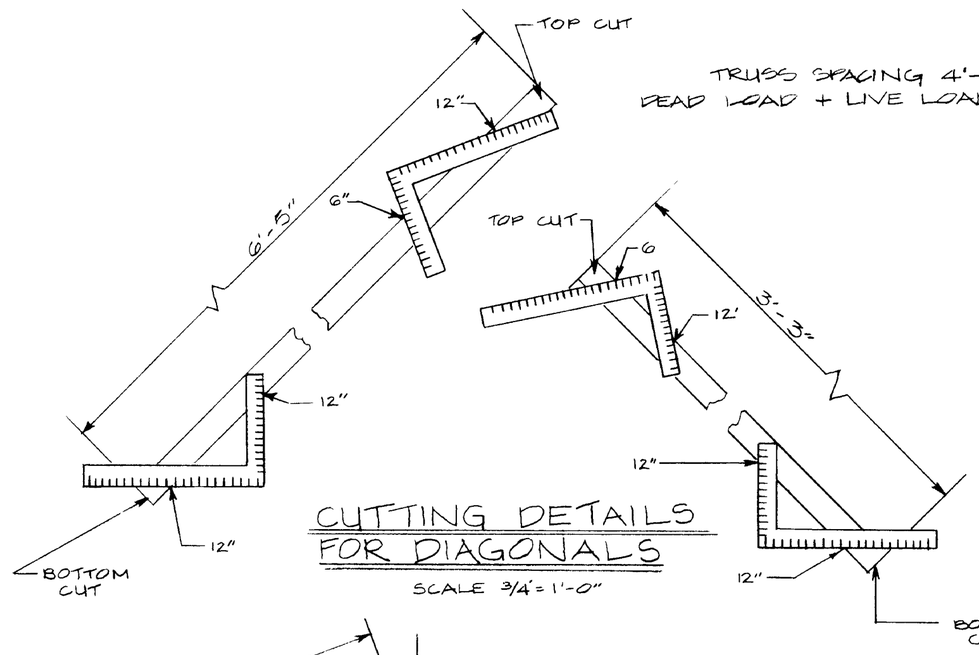

CUTTING DETAILS FOR DIAGONALS

SCALE 3/4" = 1'-0"

STRESS TABLE	
MEMBER	DEAD LOAD + LIVE LOAD
BH	+3800
CI	-3160
GJ	+2400
DJ	+3060
HI	-3460
IJ	+940

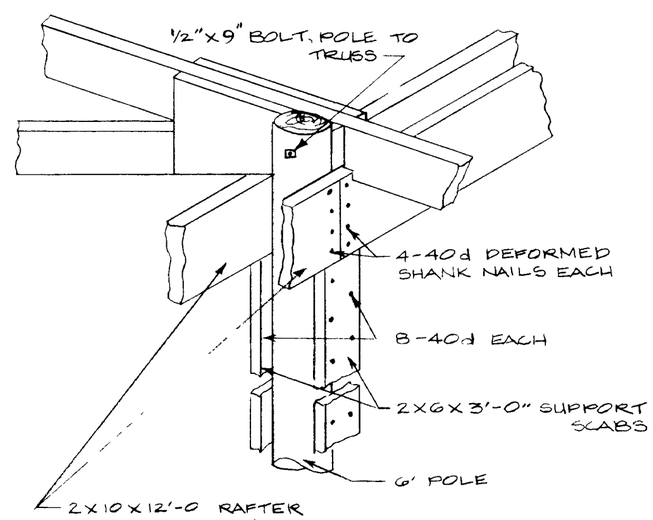

POLE FRAMING DETAIL

SCALE: 1" = 1'-0"

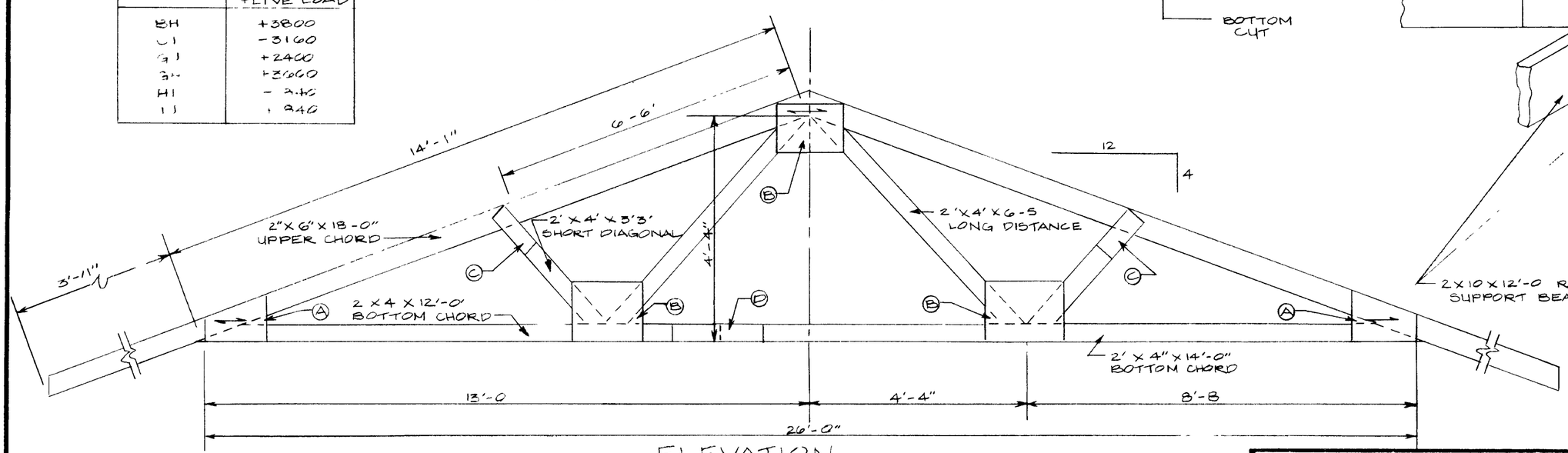

ELEVATION

SCALE 1/2" = 1'-0

GENERAL NOTES

1. USE 5/8" EXTERIOR PLYWOOD FOR GUSSET PLATES ON BOTH SIDES OF ALL JOINTS
2. ALL GUSSET PLATES ARE GLUED AND NAILED.
3. USE CASEIN OR RESORCINOL RESIN GLUE AND 6d NAILS
4. MIX GLUE ACCORDING TO MANUFACTURERS SPECIFICATIONS AND APPLY TO ALL SURFACES TO BE JOINED
5. ALL TRUSS MEMBERS ARE IN THE SAME PLANE AND ALL JOINTS ARE BUTT JOINTS.
6. TRUSS MEMBERS ARE CUT TO LENGTH AND THE TRUSS IS ASSEMBLED IN A JIG IN A HORIZONTAL POSITION
7. THE ASSEMBLED TRUSS MAY BE MOVED CAREFULLY FROM THE JIG IMMEDIATELY AFTER GUSSET PLATES HAVE BEEN APPLIED
8. LEAVE TRUSSES STACKED IN A HORIZONTAL POSITION FOR 24 HOURS AFTER ASSEMBLY
9. TRUSSES MAY BE PLACED ON FRAME WALLS OR POLE CONSTRUCTIONS
10. PROPER ANCORAGE OF TRUSSES TO WALLS IS IMPORTANT
11. USE CONSTRUCTION GRADE DOUGLAS FIR OR EQUIVALENT

HAY STORAGE AND FEEDING BARN

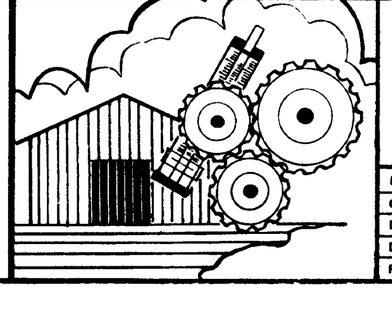

COOPERATIVE EXTENSION SERVICE
AGRICULTURE AND HOME ECONOMICS
DEPARTMENT OF AGRICULTURAL ENGINEERING
COLLEGE OF AGRICULTURE
UNIVERSITY OF KENTUCKY
AND
U.S. DEPARTMENT OF AGRICULTURE COOPERATING

DESIGNED BY	SHEET 3 OF 3
CHECKED BY	PLAN NUMBER
DRAWN BY S. ELLIOTT	KY. II. 731-2
DATE NOV 1958	
REVISIONS JAN 1980	