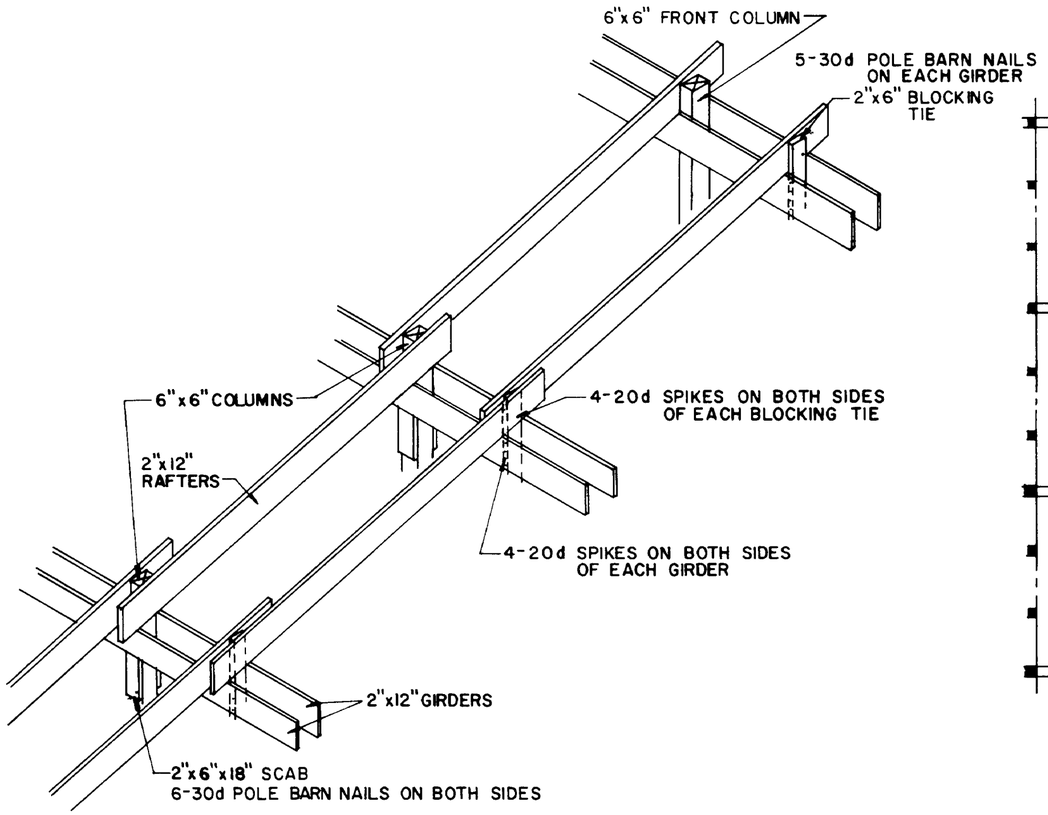

RAFTER DETAIL NOTE ANCHORAGE

12" 0 1' 2' 4'

SCALE 1/4" = 1' - 0"

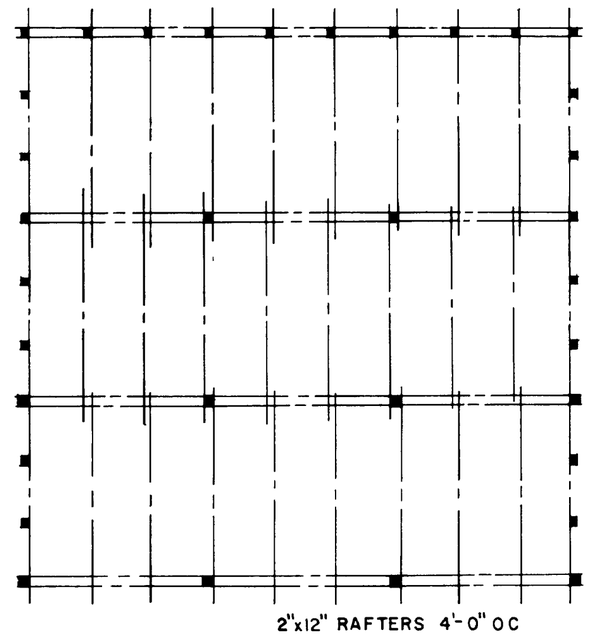

RAFTER LAYOUT

12" 0 1' 4' 11'

SCALE 1/8" = 1' - 0"

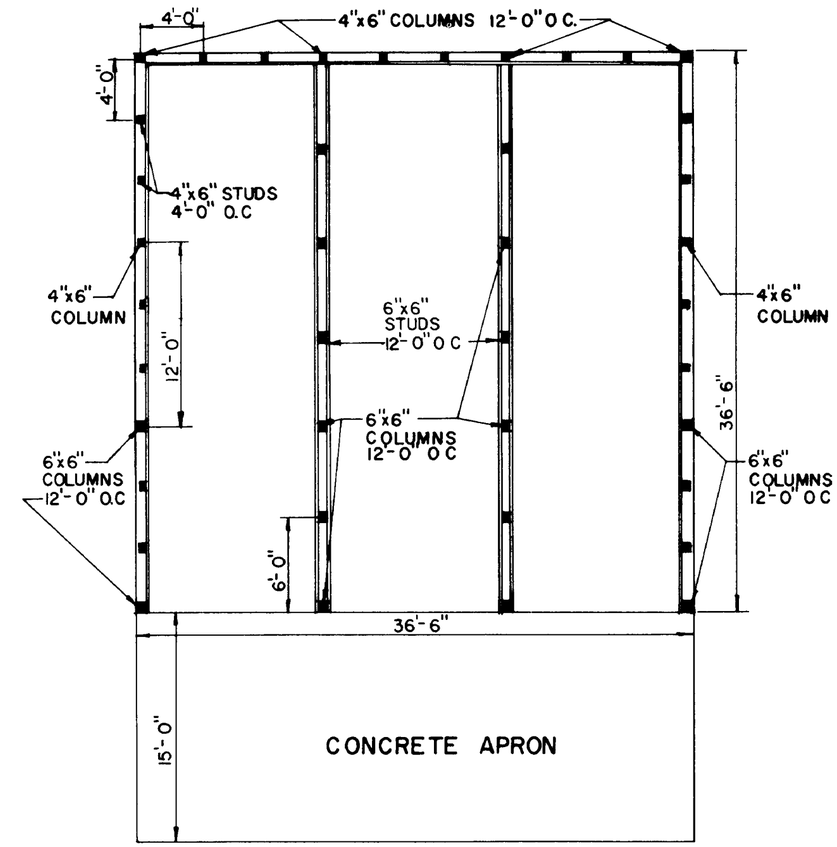

FLOOR PLAN

12" 0 1' 4' 11'

SCALE 1/8" = 1' - 0"

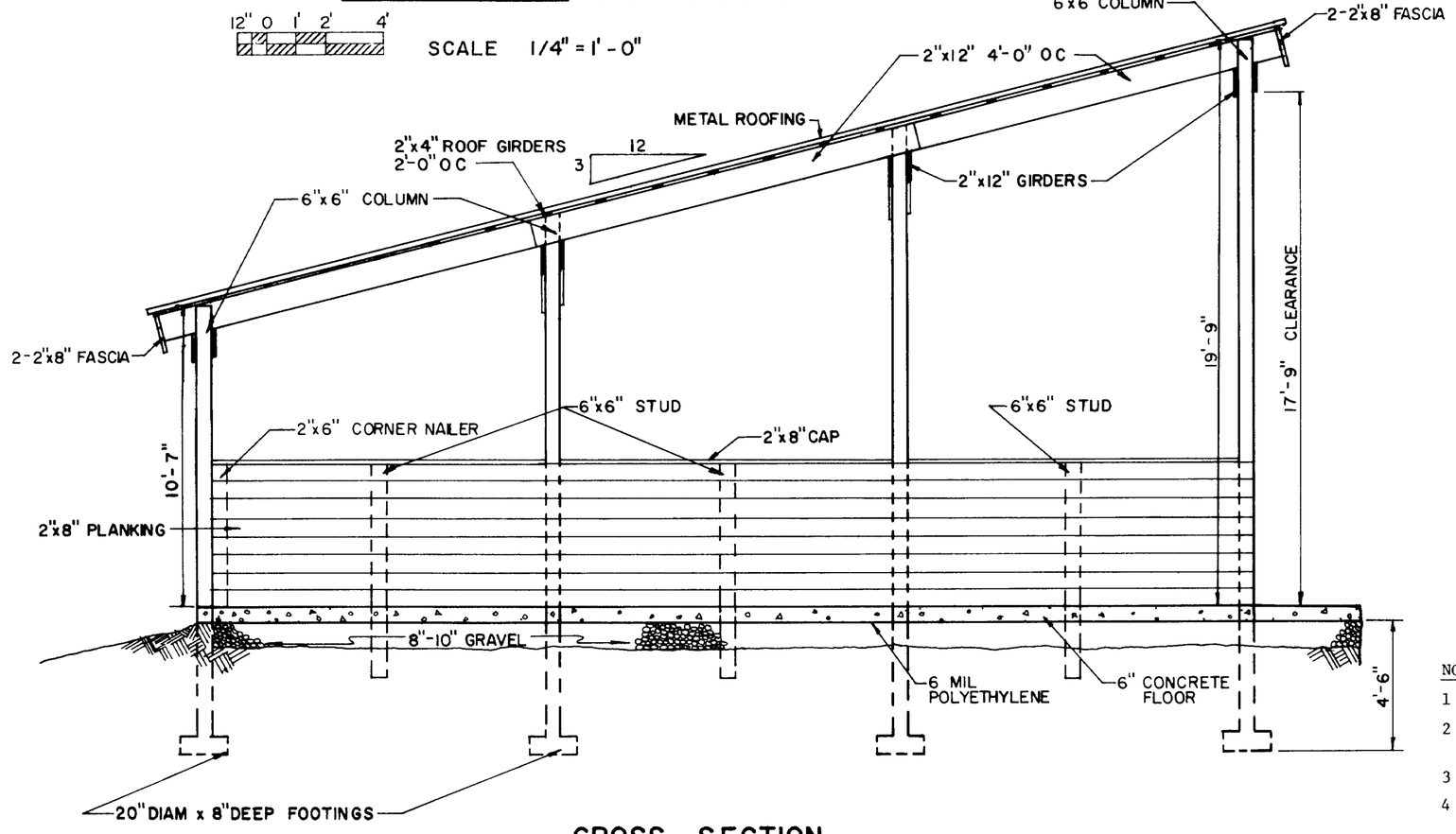

CROSS SECTION

12" 0 1' 2' 4'

SCALE 1/4" = 1' - 0"

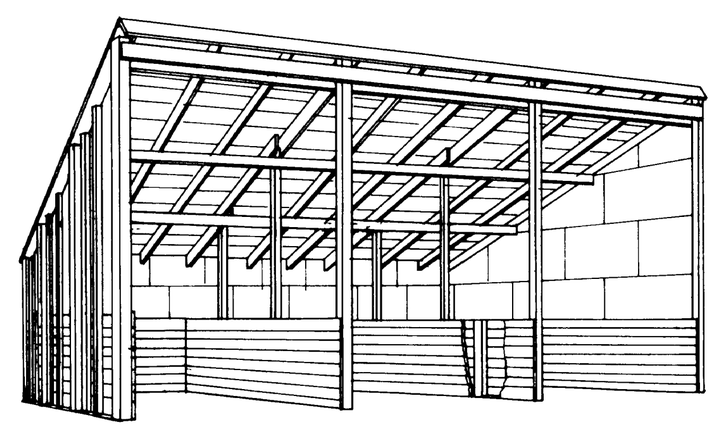

PERSPECTIVE

NOTES

1. DESIGN ROOF LOAD 30 psf
2. LUMBER BENDING STRESS f_b = 1200 psi
3. BULK MATERIAL CAPACITY 4000 lb/ft
4. ALL COLUMNS IN EARTH TO BE PRESSURE PRESERVATIVE TREATED
5. ALL PLANKING TO BE ROUGH SAWN HARDWOOD
6. CHECK DUMPING HEIGHT BEFORE CONSTRUCTION

COOPERATIVE EXTENSION SERVICE
AGRICULTURE AND HOME ECONOMICS

AND
UNITED STATES DEPARTMENT OF AGRICULTURE COOPERATING

LARGE CAPACITY BULK FEED STORAGE BIN

PENN '84	6364	SHEET 1 OF 1