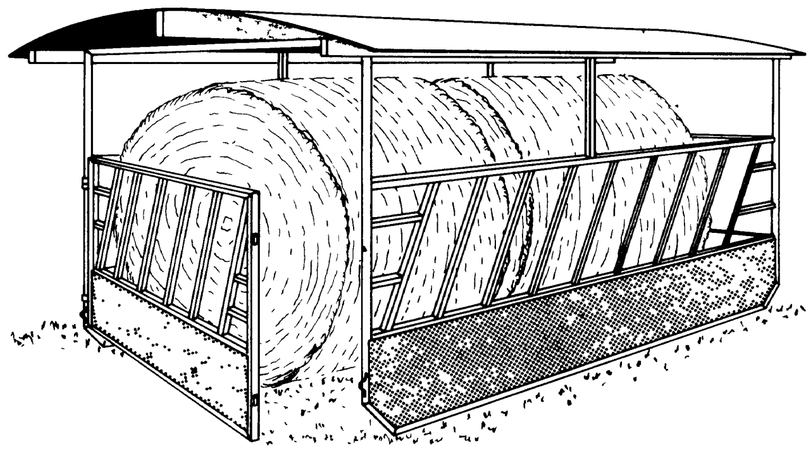

PERSPECTIVE

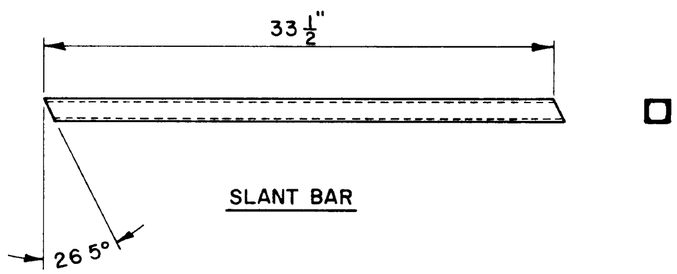

SLANT BAR

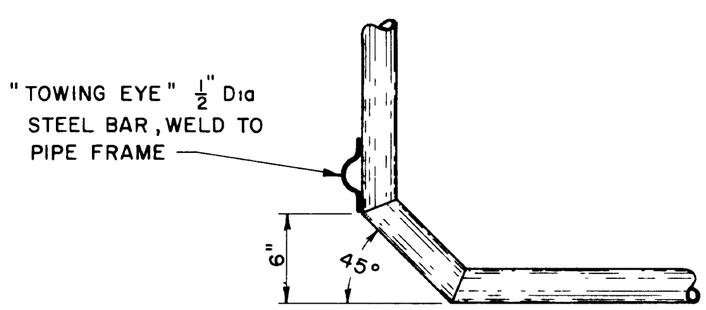

DETAIL "A"

Scale 1 1/2" = 1'-0"

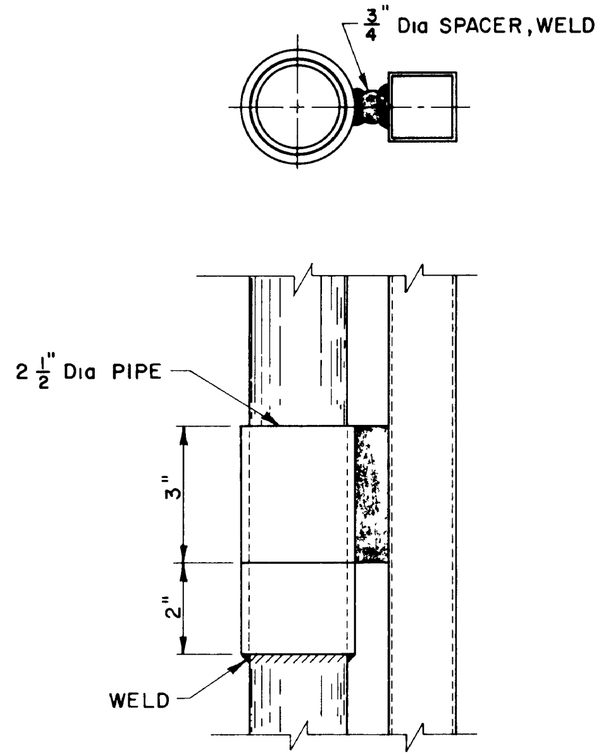

HINGE DETAIL "C"

Scale 3/8" = 1"

0 1" 2" 3" 4"

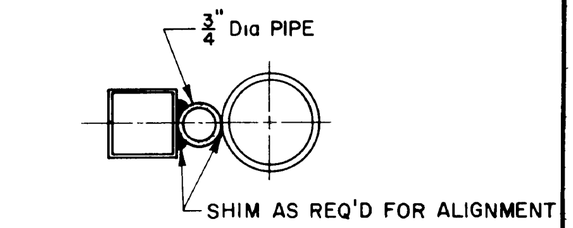

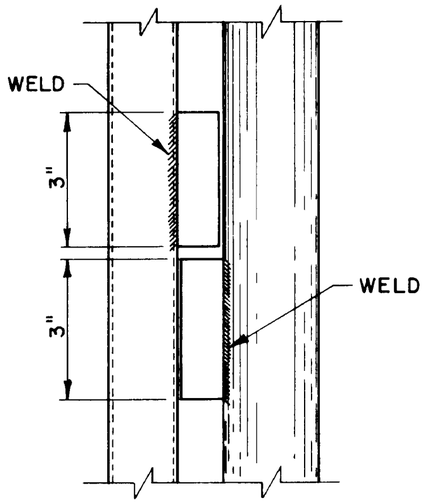

LATCH DETAIL "D"

Scale 3/8" = 1"

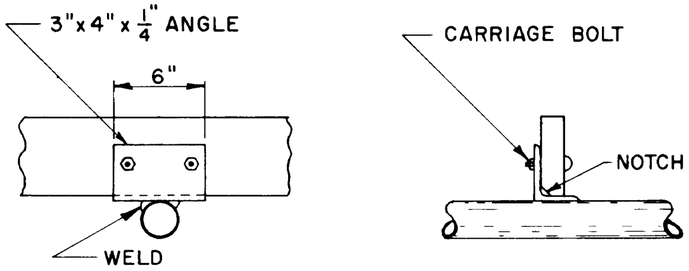

DETAIL "B"

Scale 1 1/2" = 1'-0"

12" 9" 6" 3" 0

MATERIAL	REQ'D
1 1/2" x 14 Ga Square Tubing	200'
2" Dia Pipe	80'
Corrugated Metal Roofing, 10' Sheets	7
20 Ga Sheet Metal	1' x 16'
20 Ga Sheet Metal	1'-6" x 24'
3"x4"x 1/4" Angle	12"
2"x2"x 3/16" Angle	14"
2 1/2" Dia Pipe	8"
1/4" x 3 1/2" Carriage Bolt	4
1/4" x 2 1/2" Carriage Bolt	12
2"x6"x14'	1
2"x4"x14'	2
2"x4"x8'	1
3/4" Dia Steel Bar (Latch Pins & Spacers)	As Req'd

BASED ON. OKLA. STATE UNIV. PLAN NO. OK-724-30

COOPERATIVE EXTENSION WORK IN
AGRICULTURE AND HOME ECONOMICS

AND
UNITED STATES DEPARTMENT OF AGRICULTURE COOPERATING

COVERED FEEDER FOR ROUND BALES

OK '76 | 6245 | SHEET 1 OF 2

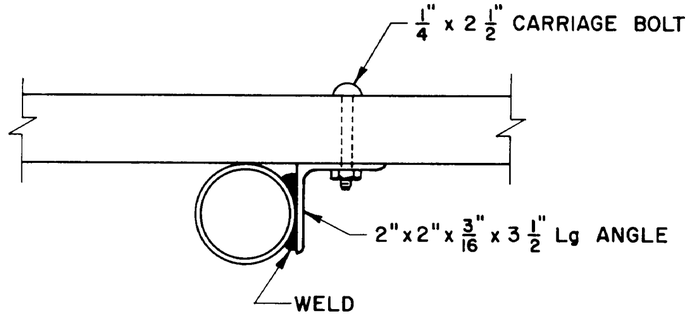

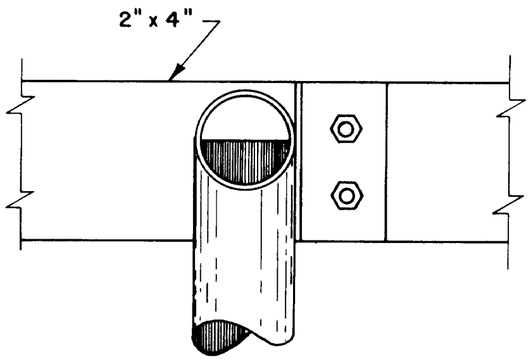

DETAIL "G"
Scale 3/8" = 1"

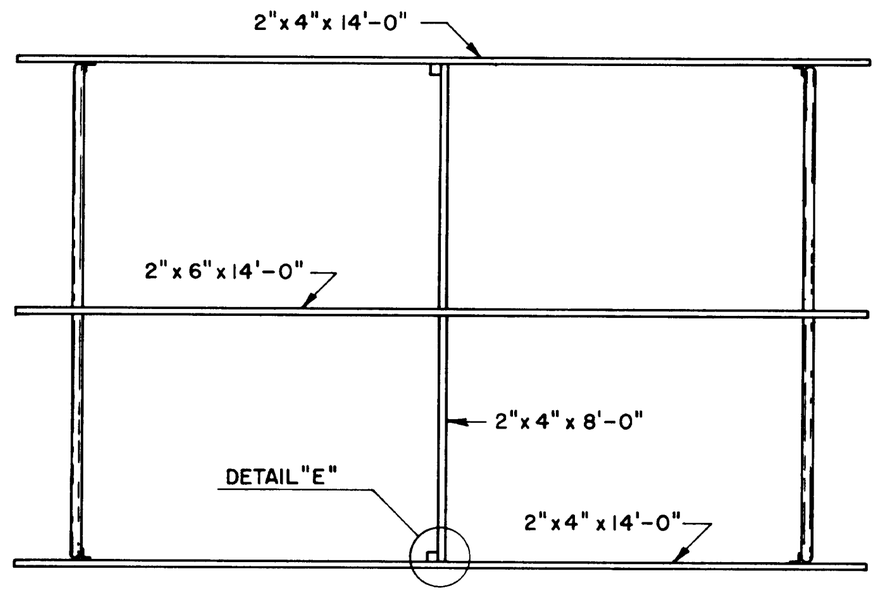

ROOF FRAMING

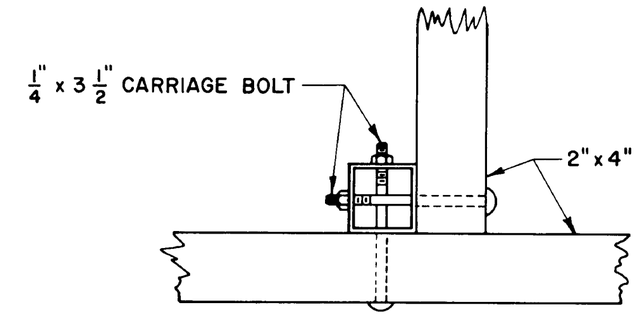

DETAIL "E"
Scale 3/8" = 1"
1" 1/2" 0 1" 2" 3"

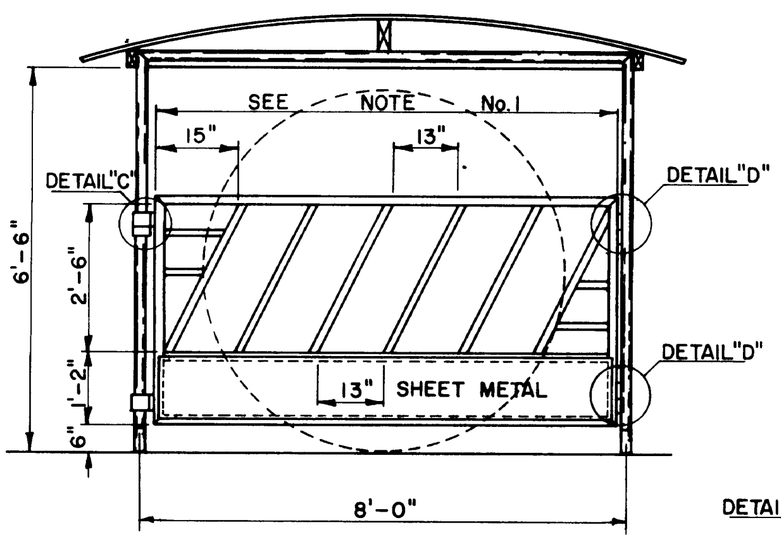

END VIEW

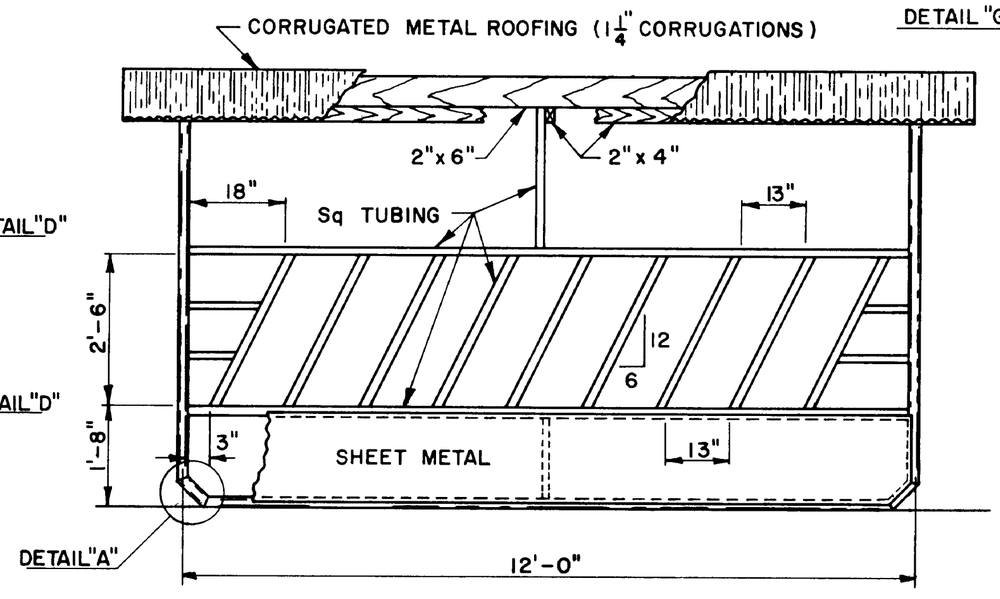

SIDE VIEW

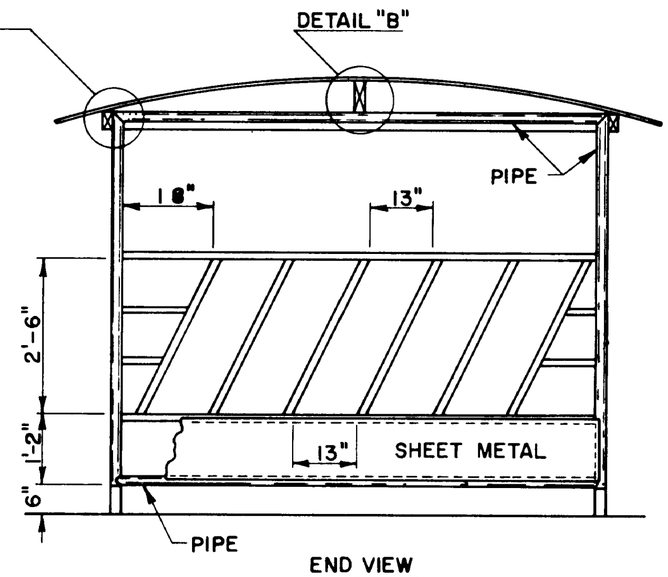

END VIEW

NOTE

1. This Dimension To Be Determined After Structure Has Been Welded Together To Insure Proper Fit
2. Feeder Designed To Accept 7' Dia. Bales — If Smaller Bales Are To Be Fed, The 8' Dimension Should Be Reduced To Bale Diameter Plus 12"
3. To Prevent Feeder From Overturning In High Winds, Fasten Securely To Ground
4. If Feeder Is To Be Used On Soft Or Spongy Soil, The Runners Should Be Made From 4" Dia Pipe

12" 6" 0 1' 2'

Except As Noted, Scale 1/2" = 1'-0"

COOPERATIVE EXTENSION WORK IN
AGRICULTURE AND HOME ECONOMICS

AND
UNITED STATES DEPARTMENT OF AGRICULTURE COOPERATING

COVERED FEEDER
FOR ROUND BALES

OK	'76	6245	SHEET 2 OF 2