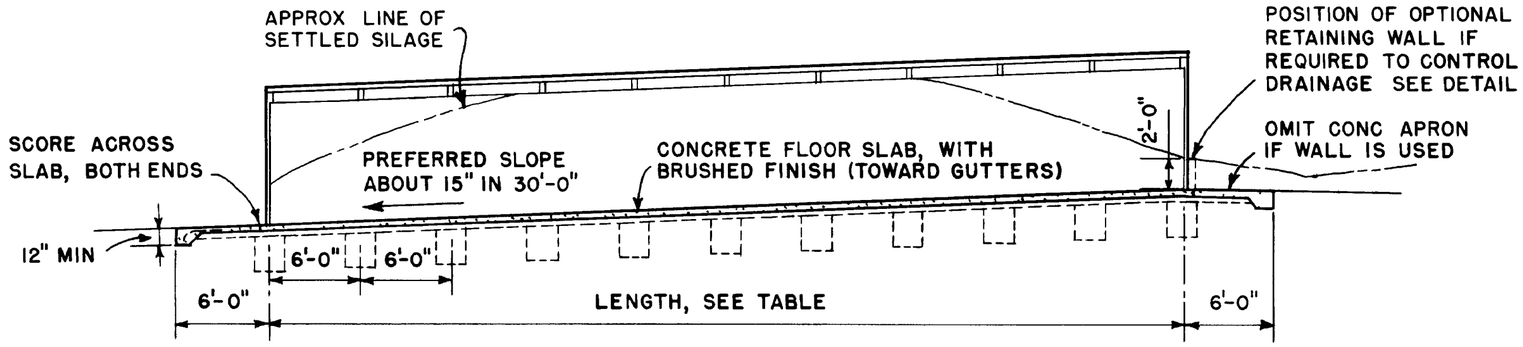

LONGITUDINAL SECTION TYPE "A" SILO

SCALE 1/8"=1'-0"

TYPES A, B, & C SILO

APPROXIMATE CAPACITIES

FEEDING PERIOD →		120 DAYS	175 DAYS	210 DAYS	CAPACITY FOR EACH 6 FT OF LENGTH
HERD SIZE	WIDTH OF SILO	LENGTH OF SILO 60 FT	78 FT	90 FT	
30 HEAD	16 FT.	114 TONS	163 TONS	196 TONS	16 TONS
37 "	20 "	141 "	202 "	242 "	20 "
44 "	24 "	168 "	240 "	288 "	24 "
51 "	28 "	195 "	278 "	334 "	28 "
58 "	32 "	222 "	317 "	380 "	32 "

CAPACITY IS BASED ON SILAGE WEIGHT OF 40 LBS PER CUBIC FOOT AND SETTLED DEPTH OF 8 FEET, EXCEPT AT ENDS

WIDTH OF SILO IS BASED ON HERD SIZE AND ON AN AVERAGE CONSUMPTION OF 60 LBS OF SILAGE PER ANIMAL PER DAY

LENGTH OF SILO IS BASED ON 4" DAILY RATE OF USE FOR WARM WEATHER CONDITIONS LENGTH MAY BE VARIED IN UNITS OF 6 FEET.

FOR SELF-FEEDING, WITH FREE ACCESS, A SILO WIDTH OF 3" TO 6" PER HEAD IS REQUIRED

DETAILS OF MOVABLE FENCES FOR SELF-FEEDING ARE SHOWN ON PLAN NO 5872

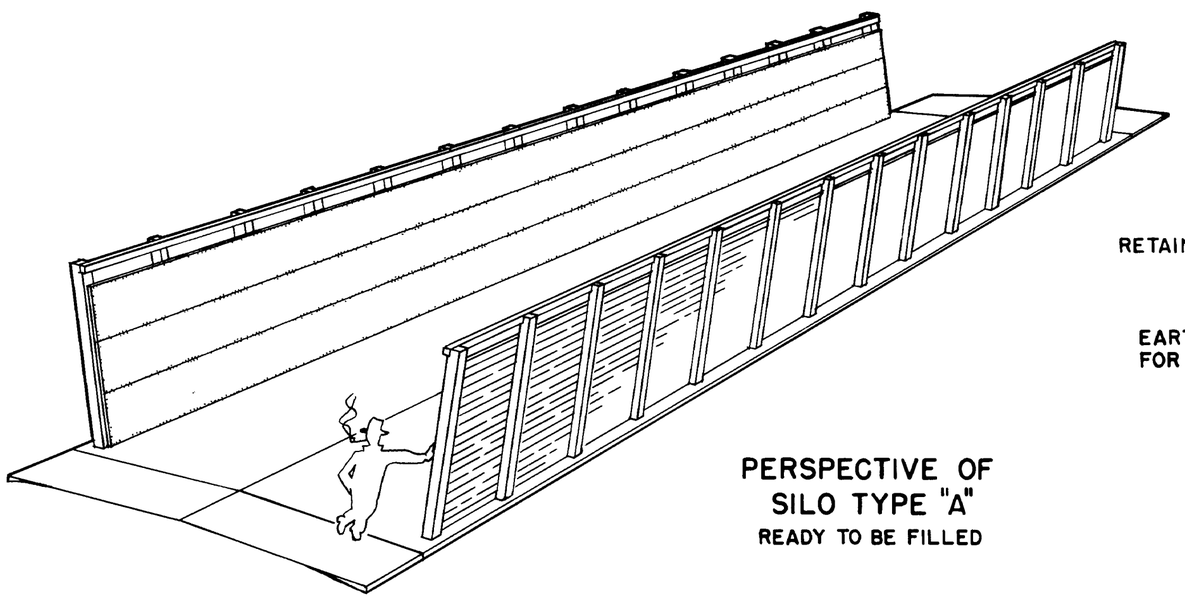

PERSPECTIVE OF SILO TYPE "A"

READY TO BE FILLED

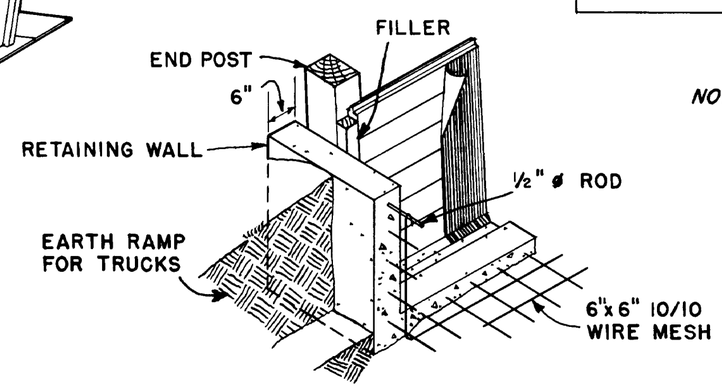

DETAIL OF OPTIONAL RETAINING WALL TYPE "A" SILO

SCALE. 1/2"=1'-0"

NOTE ALL CONCRETE TO BE 1.2 1/2 3 1/2 MIX, WITH NOT MORE THAN 6 GALLONS OF WATER PER BAG OF CEMENT

ALL WOOD SHOULD BE PRESSURE-TREATED WITH PRESERVATIVE (AFTER CUTTING) TO 8 LBS. PER CUBIC FOOT RETENTION

STAGGER END JOINTS OF PLANKS IN EACH ROW SO JOINTS FALL ON ALTERNATE POSTS.

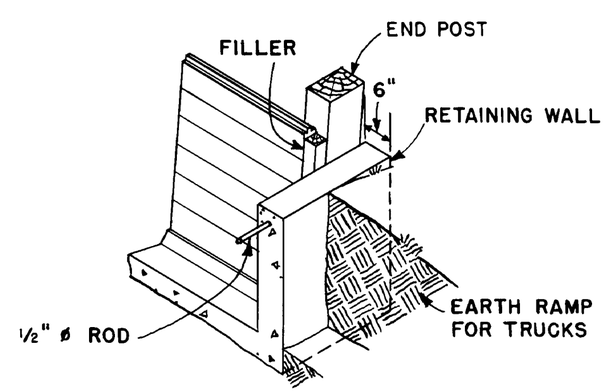

DETAIL OF OPTIONAL RETAINING WALL TYPES "B & C" SILO

SCALE 1/2"=1'-0"

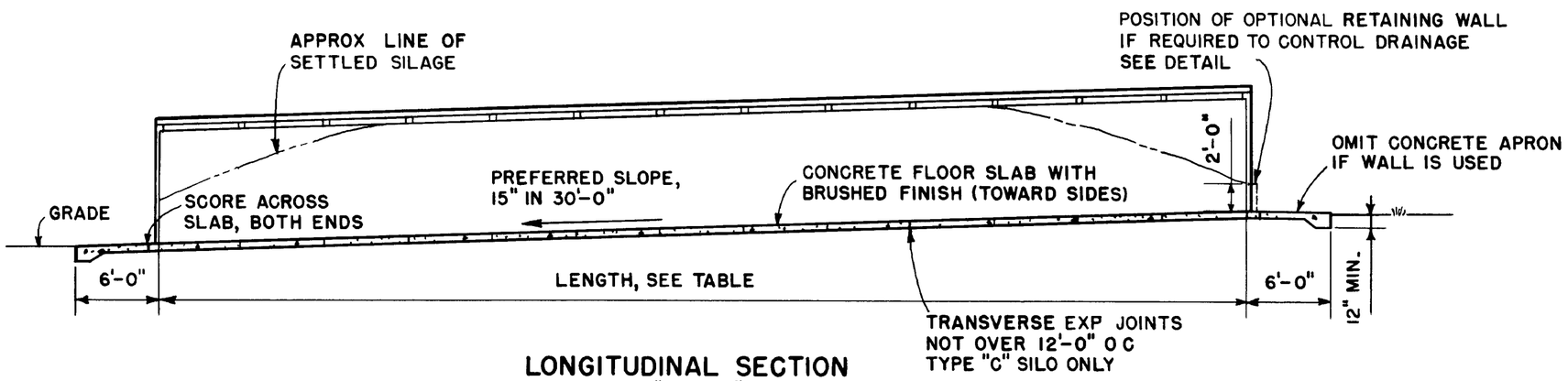

LONGITUDINAL SECTION TYPES "B & C" SILO

SCALE 1/8"=1'-0"

COOPERATIVE EXTENSION WORK IN AGRICULTURE AND HOME ECONOMICS

UNIVERSITY OF KENTUCKY AND UNITED STATES DEPARTMENT OF AGRICULTURE COOPERATING

SILO TYPES A, B, & C

USDA '68	EX 6048	SHEET 1 OF 2

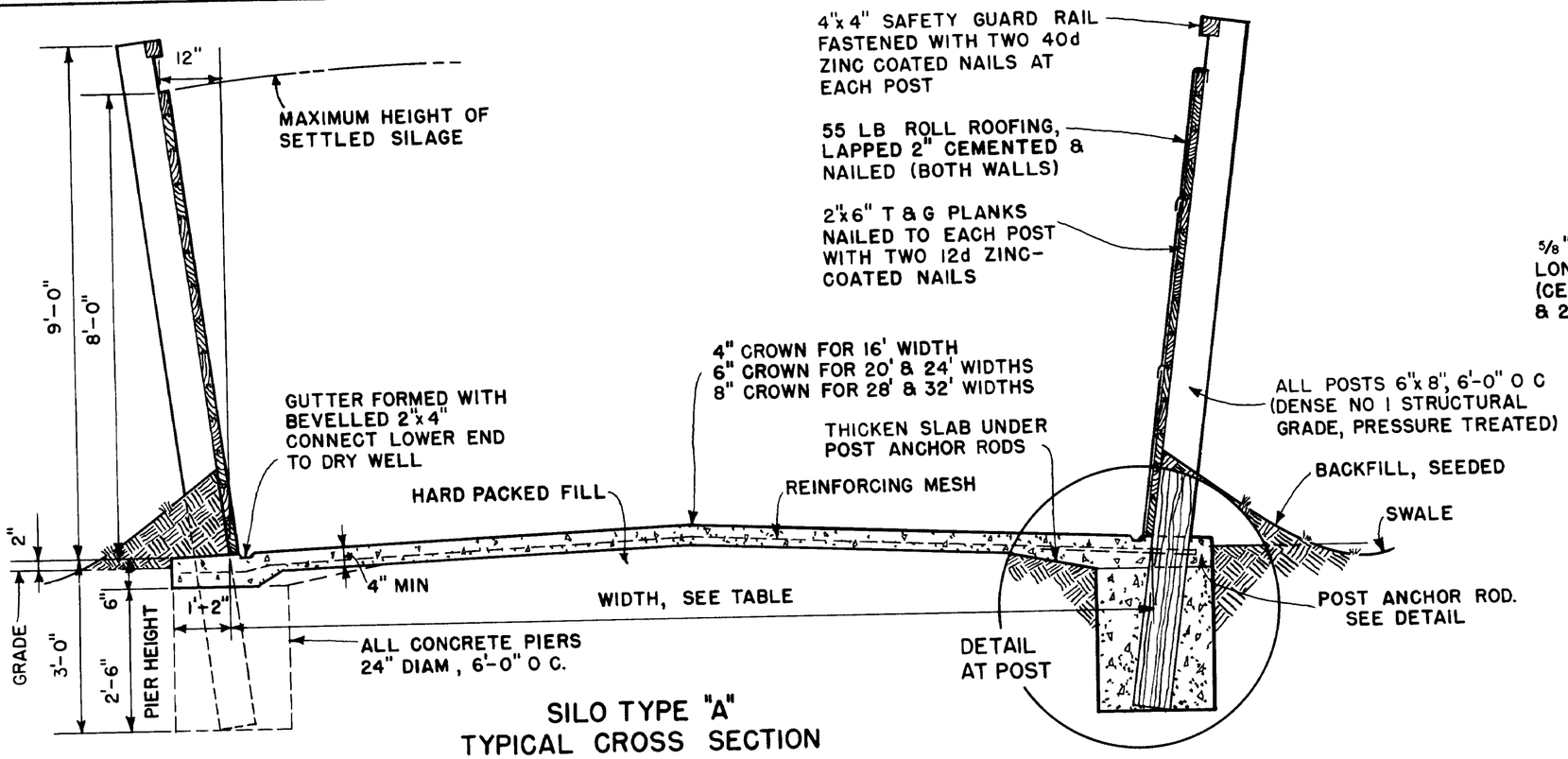

SILO TYPE "A"
TYPICAL CROSS SECTION

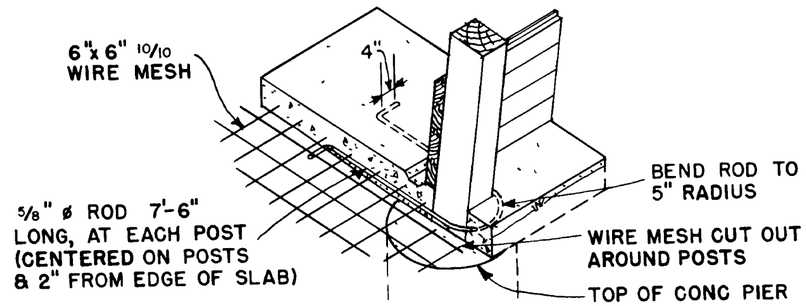

DETAIL OF POST ANCHORAGE
SILO TYPE "A"

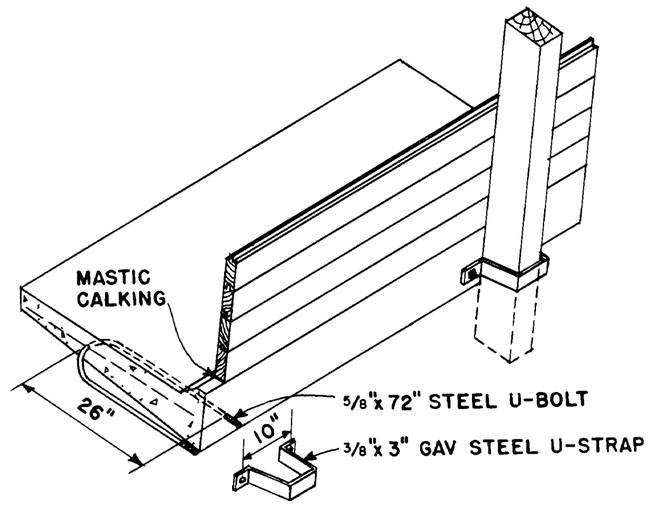

DETAIL OF POST ANCHORAGE
SILO TYPE "B"

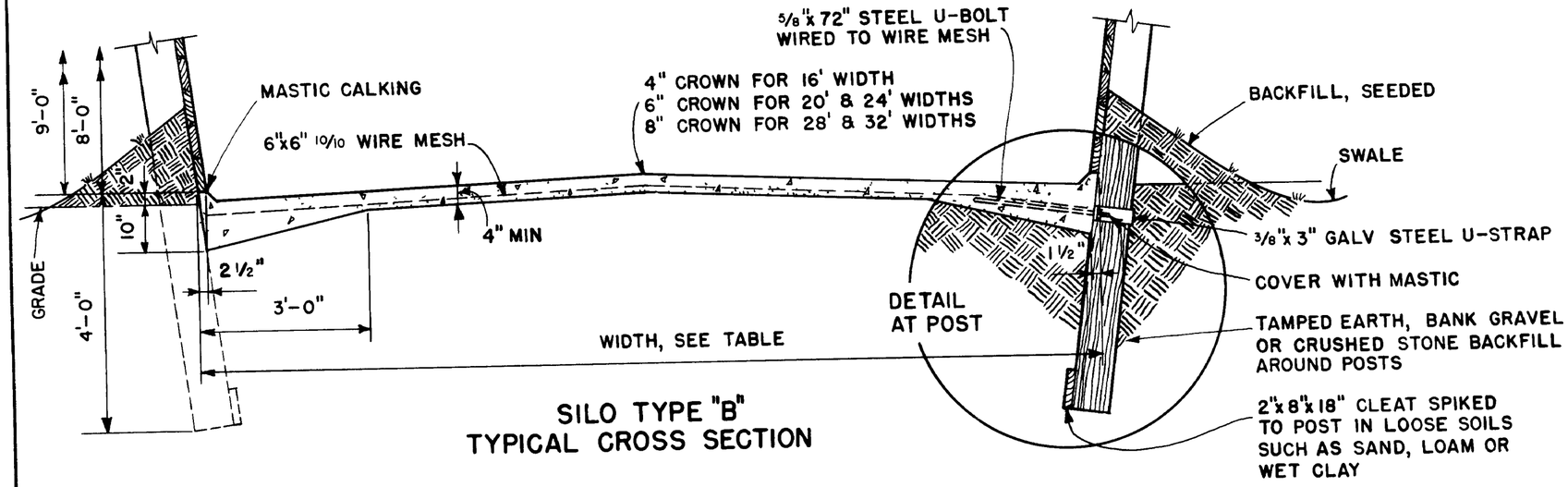

SILO TYPE "B"
TYPICAL CROSS SECTION

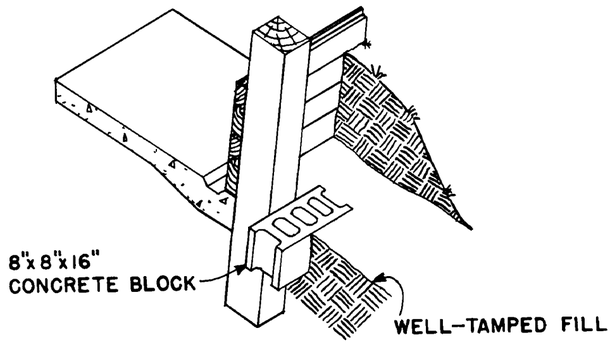

POST DETAIL
SILO TYPE "C"

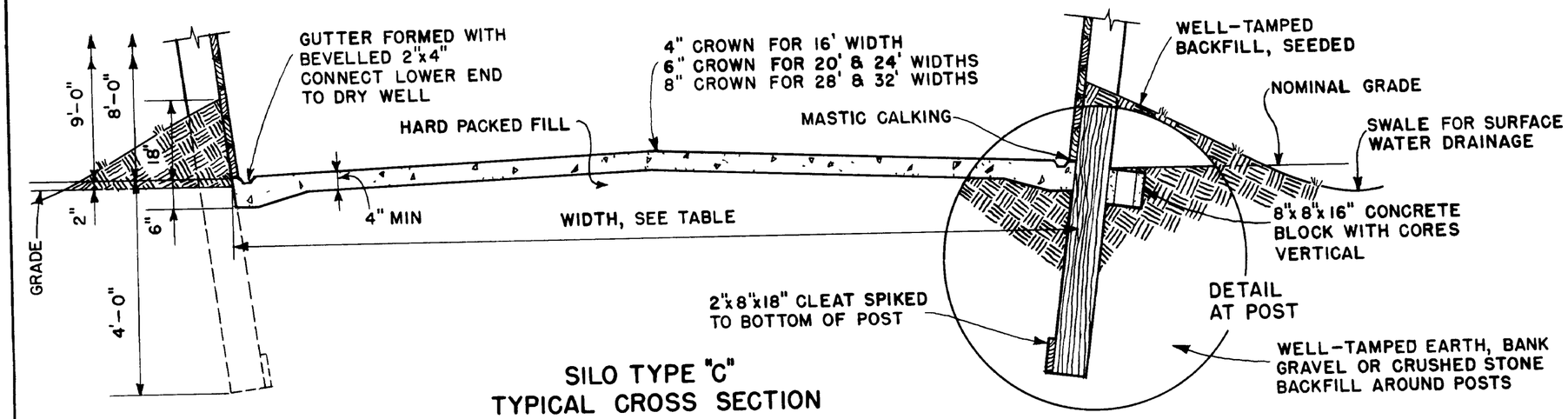

SILO TYPE "C"
TYPICAL CROSS SECTION

NOTE SCALE 1/2"=1'-0" THRU-OUT UNLESS OTHERWISE NOTED

COOPERATIVE EXTENSION WORK IN AGRICULTURE AND HOME ECONOMICS
UNIVERSITY OF KENTUCKY
AND
UNITED STATES DEPARTMENT OF AGRICULTURE COOPERATING

SILO TYPES A,B,&C.

USDA	'68	EX 6048	SHEET 2 OF 2