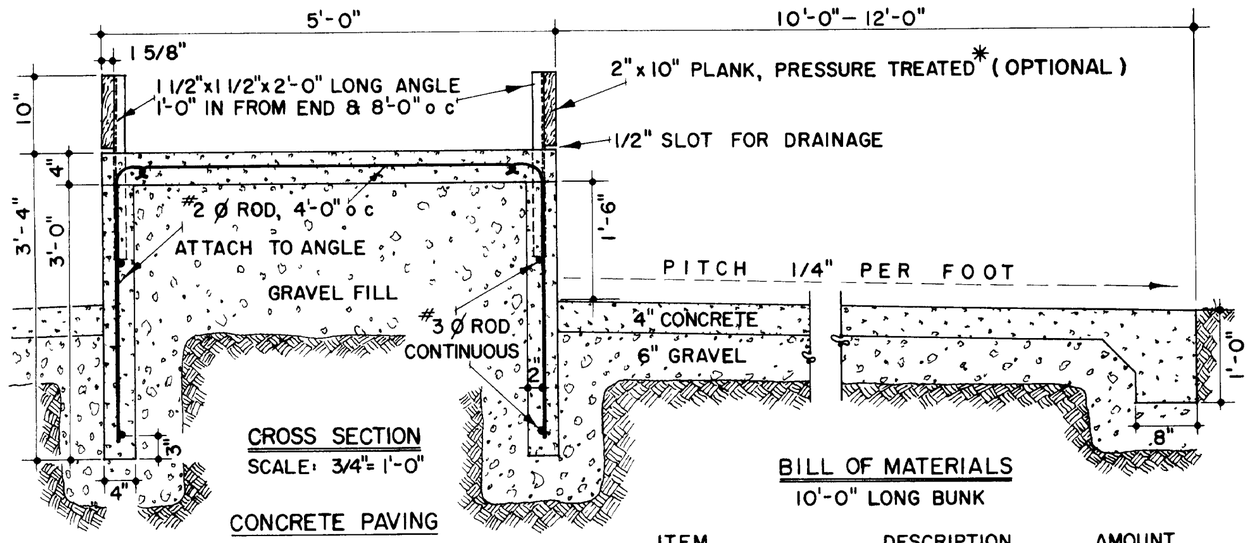

CROSS SECTION
SCALE: 3/4"= 1'-0"

CONCRETE PAVING

1 REMOVE ALL TOPSOIL AND ORGANIC MATERIAL PRIOR TO PLACEMENT OF GRAVEL FILL

2 USE AIR-ENTRAINED CONCRETE TO REDUCE SCALING AND FROST ACTION ON THE SURFACE

BILL OF MATERIALS
10'-0" LONG BUNK

ITEM	DESCRIPTION	AMOUNT
CONCRETE	BUNK – SIDES, BOTTOM	14 CU YDS.
CONCRETE PAVING	12' WIDE – BOTH SIDES	375 CU YDS
PLANK	2"x10"x 10'-0"	2
ANGLES	1 1/2"x 1 1/2"x 2'-0"	4
REINFORCING	#3 Ø ROD	40 FEET
	#2 Ø ROD	33 FEET
BOLTS	CARRIAGE 1/2"x3"	8

REINFORCED CONCRETE BUNK

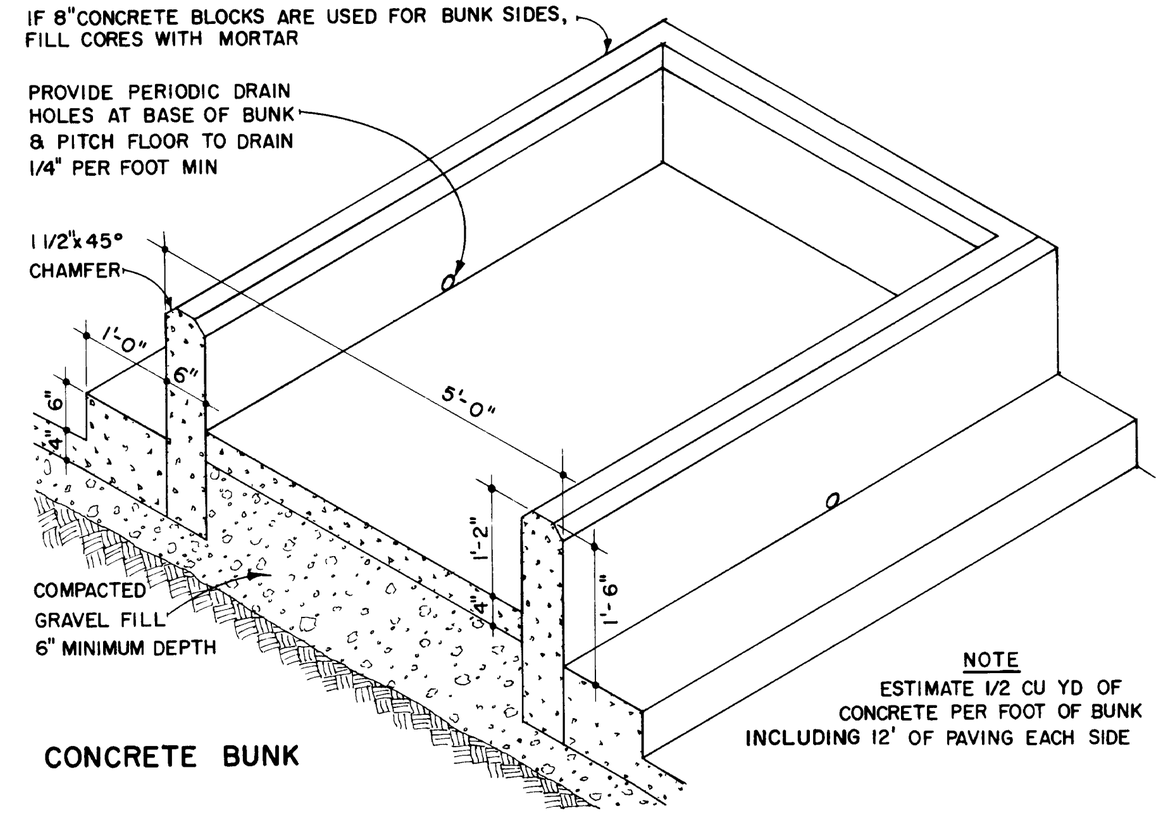

NOTE
ESTIMATE 1/2 CU YD OF CONCRETE PER FOOT OF BUNK INCLUDING 12' OF PAVING EACH SIDE

CONCRETE BUNK

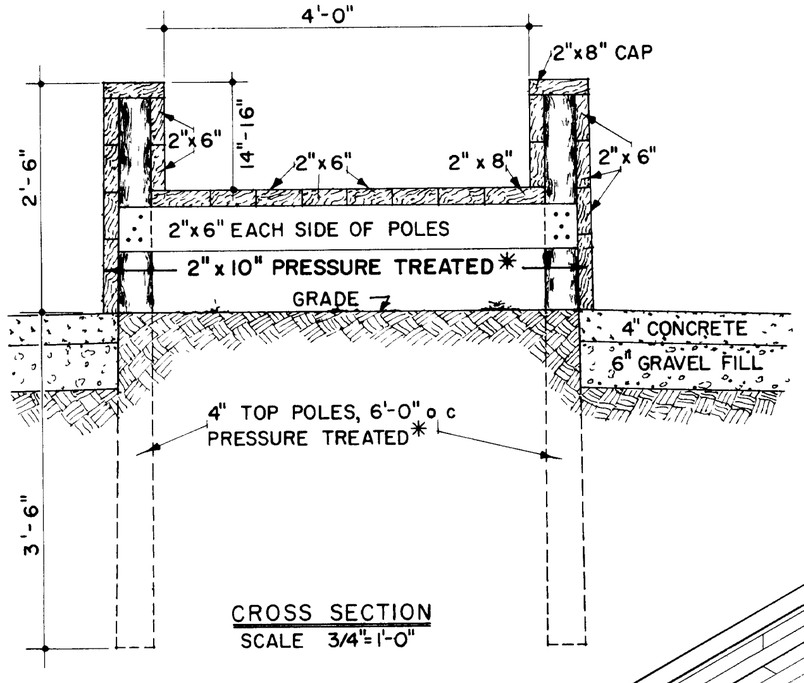

CROSS SECTION
SCALE 3/4"= 1'-0"

BILL OF MATERIALS
60'-0" LONG BUNK

ITEM	SIZE	PCS
POLES	4" TOP x 6'-0" LONG	22
JOISTS	2"x 6" x 5'-0"	22
FLOORING	2" x 6" x 12'-0"	30
	2" x 8" x 12'-0"	10
SIDES	2" x 6" x 12'-0"	50
	2" x 10" x 12'-0"	10
CAP	2" x 6" x 12'-0"	10
ENDS	2" x 6" x 5'-4"	4
	2" x 8" x 5'-4"	2
	2" x 10" x 5'-4"	2

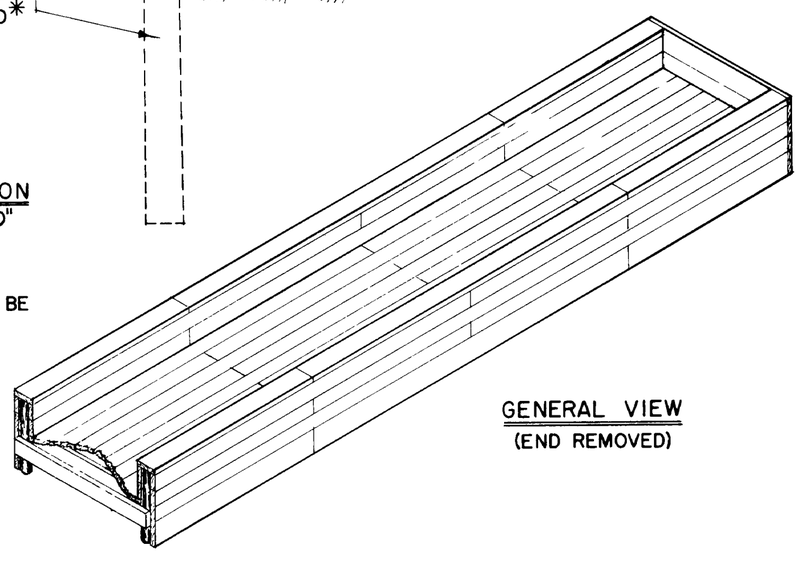

GENERAL VIEW
(END REMOVED)

* PRESSURE TREATED MATERIAL SHALL BE CONSTRUCTION GRADE DOUGLAS FIR OR EQUAL & SHALL BE PRESSURE TREATED TO A PRESERVATIVE RETENTION OF 5-7 LBS PER CUBIC FOOT AS PER AWPA STANDARDS

POLE BUNK

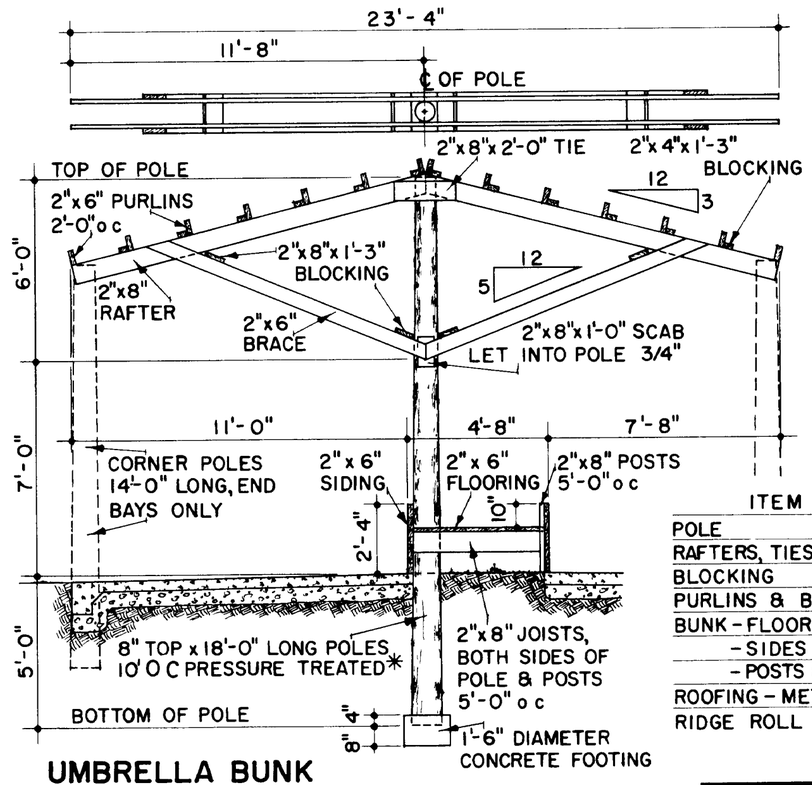

NOTE
BUILD RAFTER-BRACE FRAME AS A UNIT BEFORE FASTENING TO POLES BUILD ROOF PANELS AS A 12' x 10' UNIT

BILL OF MATERIALS
10'-0" LONG BUNK

ITEM	SIZE	PCS
POLE	8" TOP x 18'-0" LONG	1
RAFTERS, TIES, SCABS	2" x 8" x 12'-0"	5
BLOCKING	2" x 4" x 16'-0"	1
PURLINS & BRACES	2" x 6" x 10'-0"	18
BUNK – FLOOR	2" x 8" x 10'-0"	7
– SIDES	2" x 6" x 10'-0"	10
– POSTS & JOISTS	2" x 8" x 14'-0"	2
ROOFING – METAL	240 SQ FT	
RIDGE ROLL	10 LINEAL FT	

UMBRELLA BUNK

CROSS SECTION
SCALE 1/4"= 1'-0"

COOPERATIVE EXTENSION WORK IN
AGRICULTURE AND HOME ECONOMICS
DEPARTMENT OF AGRICULTURAL ENGINEERING
COLLEGE OF AGRICULTURE
UNIVERSITY OF KENTUCKY
AND
UNITED STATES DEPARTMENT OF AGRICULTURE COOPERATING

SILAGE FEED BUNKS

CONN '67 | EX 6012 | SHEET 1 OF 1

RELEASED 1972