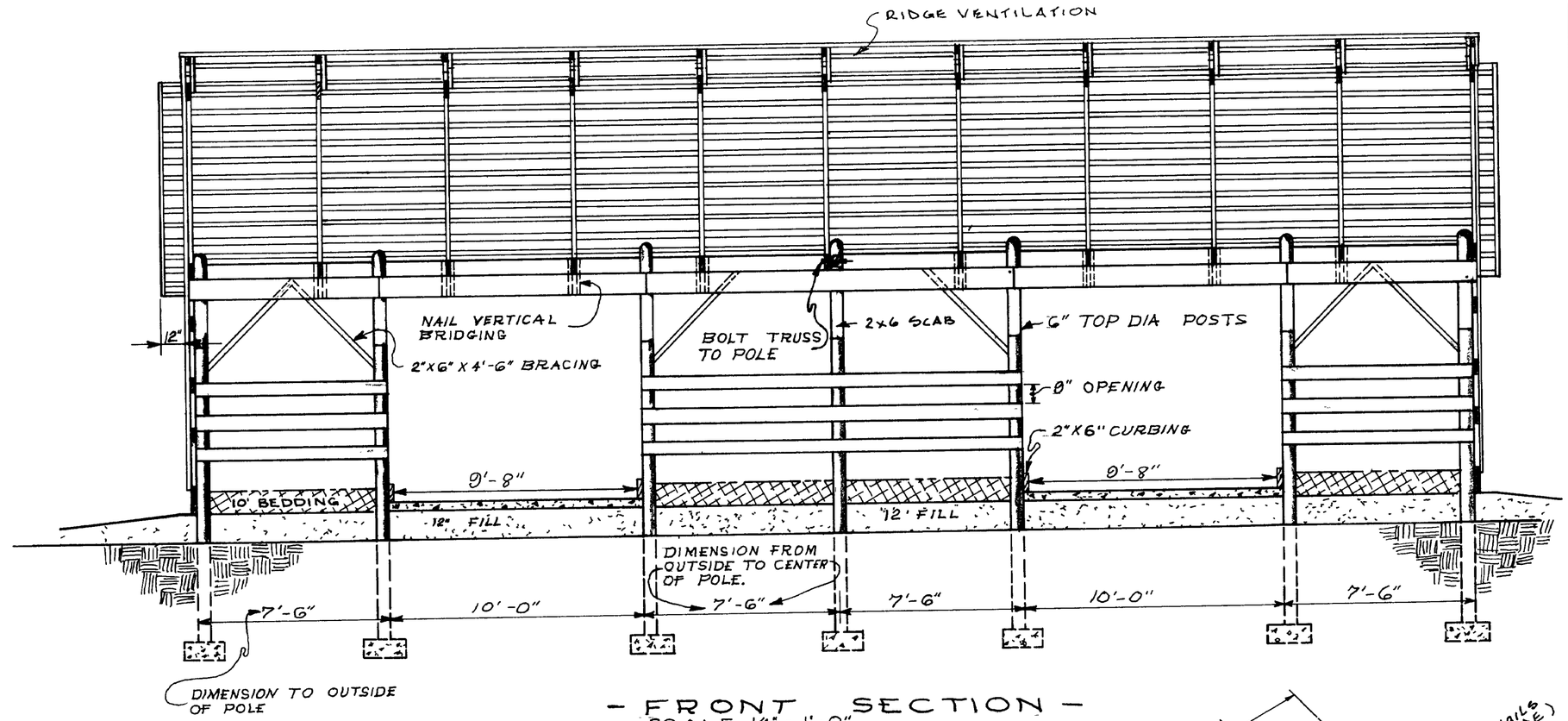

- FRONT SECTION -
SCALE 1/4" = 1'-0"

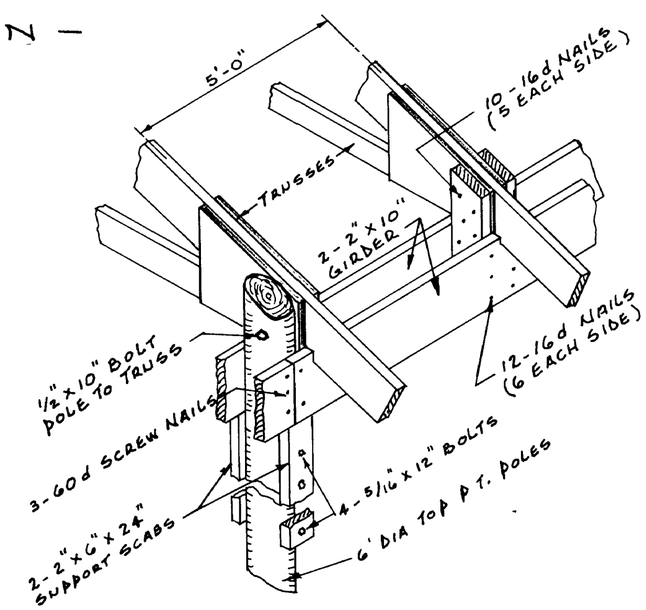

POLE FRAMING DETAILS
N.T.S

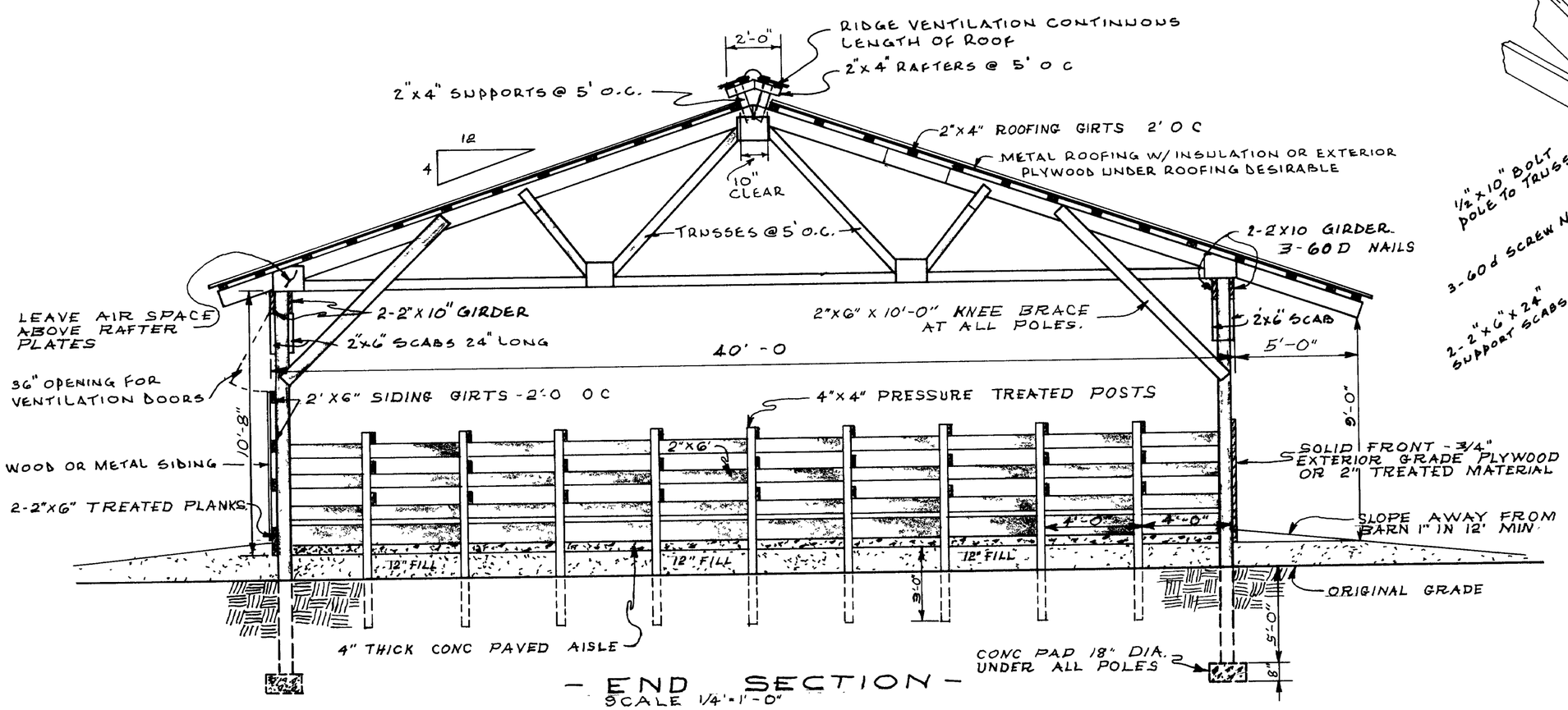

- END SECTION -
SCALE 1/4" = 1'-0"

COOPERATIVE EXTENSION WORK IN
AGRICULTURE AND HOME ECONOMICS
DEPARTMENT OF AGRICULTURAL ENGINEERING
COLLEGE OF AGRICULTURE
UNIVERSITY OF KENTUCKY &
U S DEPARTMENT OF AGRICULTURE COOPERATING

FREE STALL DAIRY UNIT
(SIDE ENTERING POLE BARN)

Designed By G TURNER	Sheet 2 of 3
Checked By: J N WALKER	Plan Number.
Drawn By K J - B R.B	KY. 11.723-30
Date	

REVIEWED 1972

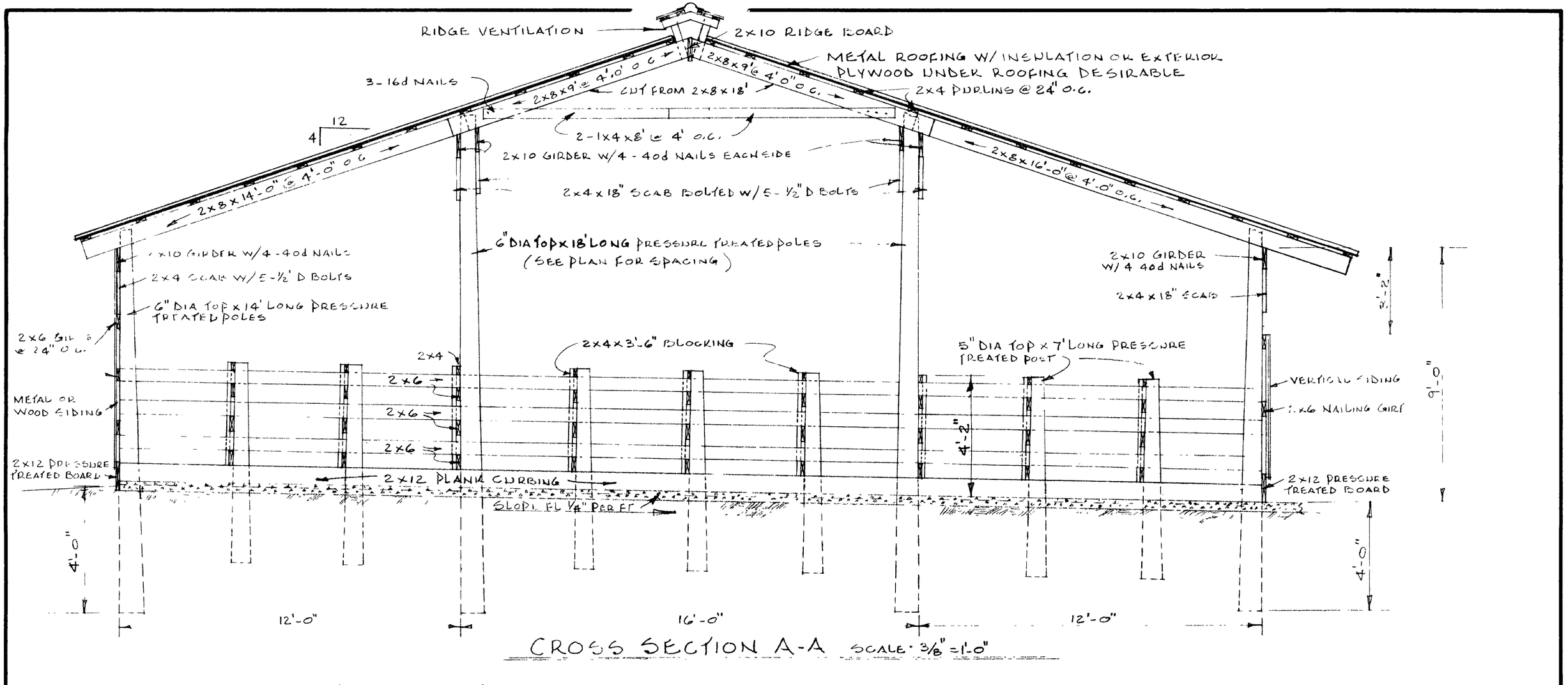

"THESE PLANS ARE FOR USE AS A CONSTRUCTION GUIDE IF A CONSTRUCTION CONTRACT IS TO BE MADE, WRITTEN SPECIFICATIONS ARE NEEDED."

COOPERATIVE EXTENSION WORK IN
AGRICULTURE AND HOME ECONOMICS
DEPARTMENT OF AGRICULTURAL ENGINEERING
COLLEGE OF AGRICULTURE
UNIVERSITY OF KENTUCKY &
U S DEPARTMENT OF AGRICULTURE COOPERATING

FREE-STALL DAIRY UNIT
SIDE ENTERING-POLE SUPPORT

Designed By G.T.	Sheet 3 of 3
Checked By J.D.B.	Plan Number
Drawn By B.E. Easter	KY. 11.723-30
Date DEC 1969	

REVIEWED 1972

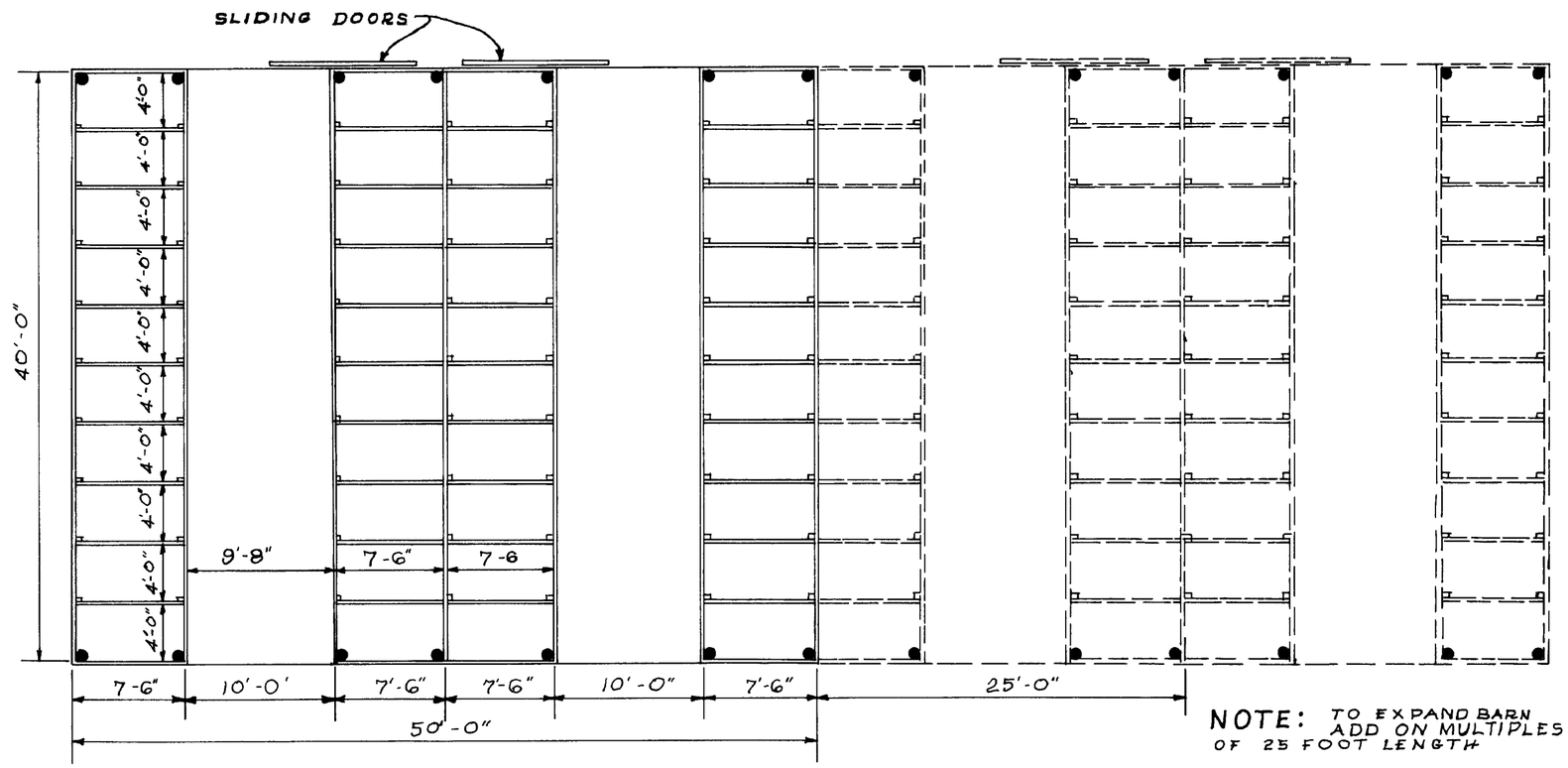

NOTE: TO EXPAND BARN ADD ON MULTIPLES OF 25 FOOT LENGTH

- FLOOR PLAN -
SCALE - 1/8" = 1'-0"

STALLS 4' WIDE X 7'6" LONG
40' X 50' = 40 STALLS
40' X 75' = 60 STALLS
40' X 100' = 80 STALLS

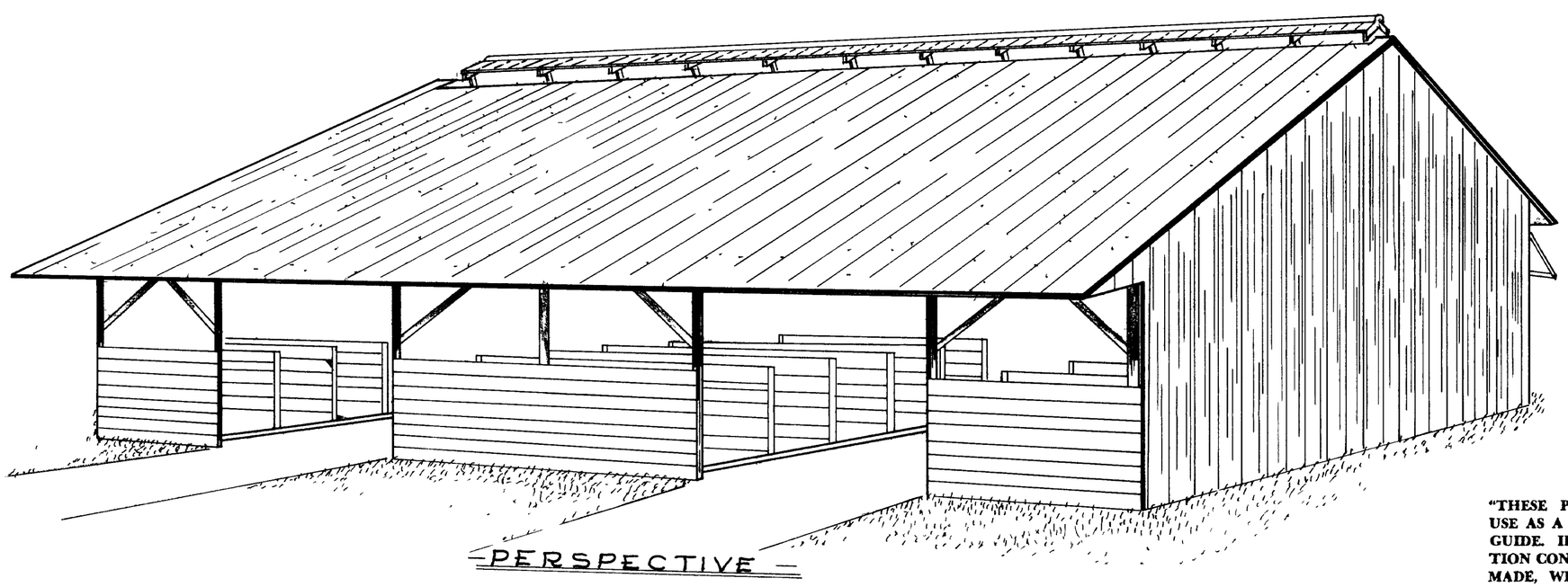

-PERSPECTIVE-

"THESE PLANS ARE FOR USE AS A CONSTRUCTION GUIDE. IF A CONSTRUCTION CONTRACT IS TO BE MADE, WRITTEN SPECIFICATIONS ARE NEEDED."

COOPERATIVE EXTENSION WORK IN
AGRICULTURE AND HOME ECONOMICS
DEPARTMENT OF AGRICULTURAL ENGINEERING
COLLEGE OF AGRICULTURE
UNIVERSITY OF KENTUCKY &
U S DEPARTMENT OF AGRICULTURE COOPERATING

FREE STALL DAIRY UNIT
(SIDE ENTERING POLE BARN).

Designed By G. TURNER	Sheet 1 of 3
Checked By: J N WALKER	Plan Number
Drawn By K.J + B R B	KY. 11.723-30
Date REV 83	

REVIEWED 1972