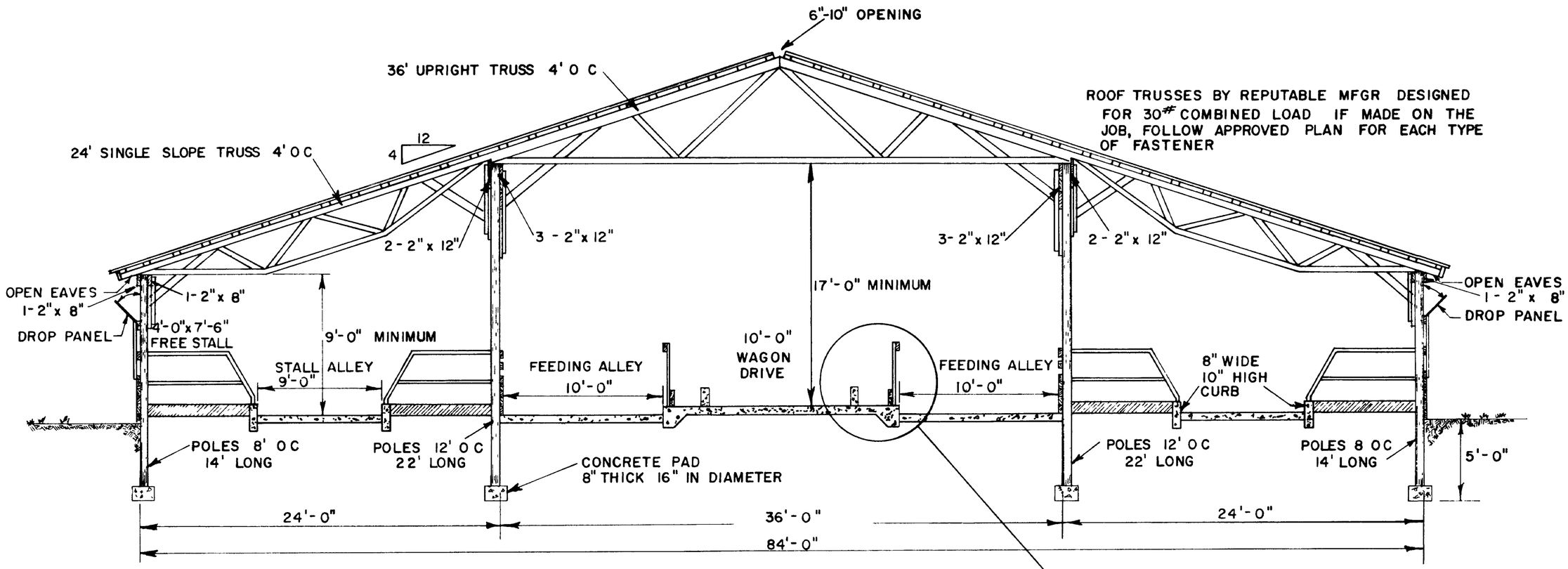

CROSS SECTION

MANY OTHER TYPES OF BUILDINGS CAN BE USED - METAL FRAME, LAMINATED RAFTERS, ETC

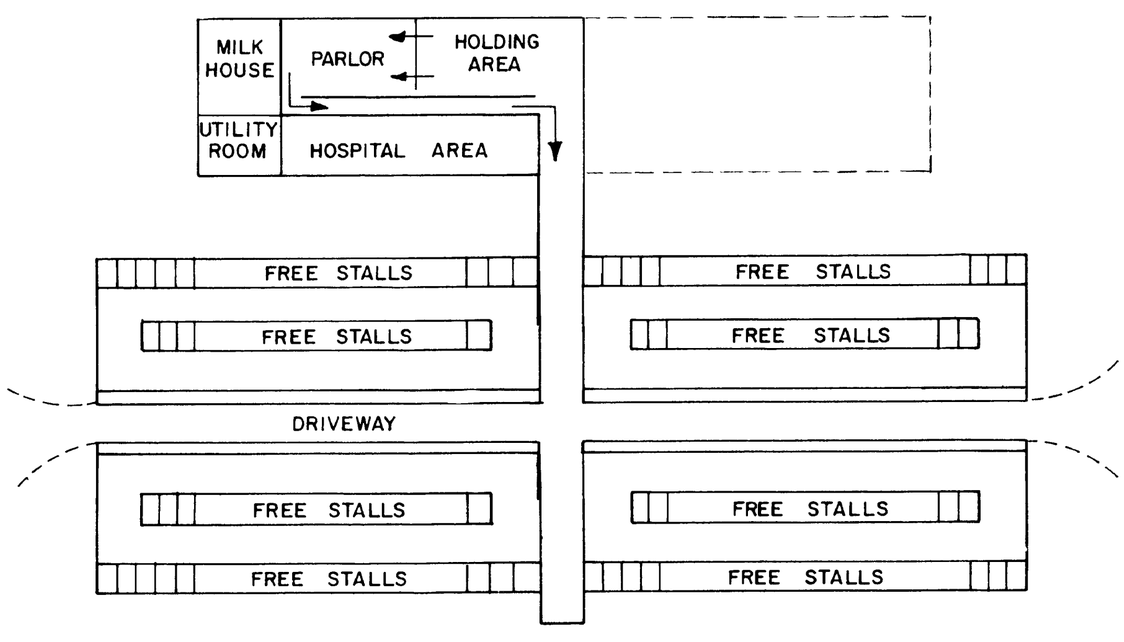

ALTERNATE LOCATION FOR THE MILKING CENTER, HOLDING AREA AND HOSPITAL AREA

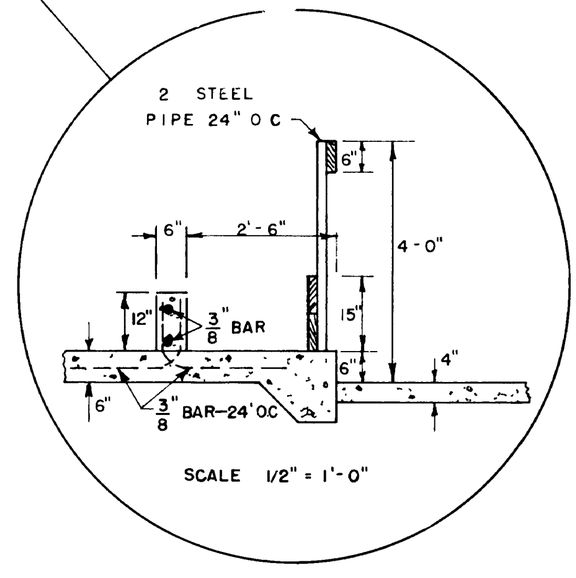

MANGER DETAIL

COOPERATIVE EXTENSION WORK IN
AGRICULTURE AND HOME ECONOMICS
DEPARTMENT OF AGRICULTURAL ENGINEERING
COLLEGE OF AGRICULTURE
UNIVERSITY OF KENTUCKY
AND
UNITED STATES DEPARTMENT OF AGRICULTURE COOPERATING

FREE STALL BARN
DRIVE-THRU TYPE

PA	'71	6111	SHEET 2 OF 3

REVIEWED 1972

SIDE WALL DETAIL

POLES MUST BE PRESSURE TREATED FOR 50 YEAR LIFE UNTREATED OR COLD TREATED POLES WILL HAVE A SHORT LIFE POLES MAY BE ROUND (6" TOPS) OR SQUARE (6" x 6")

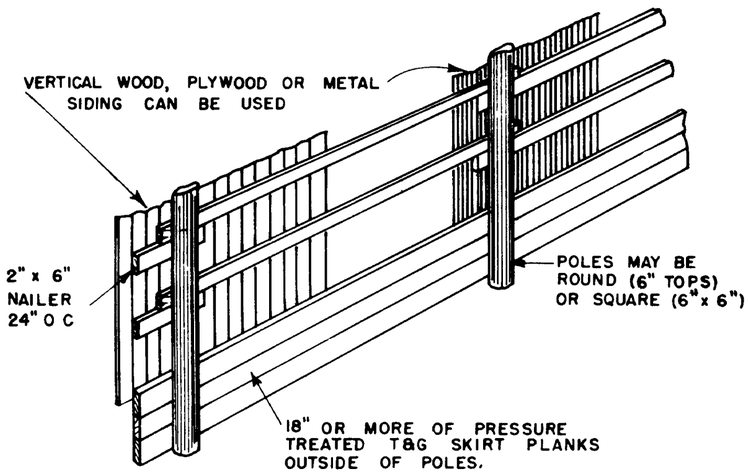

INTERIOR POLE BRACING AND RAFTER DETAIL

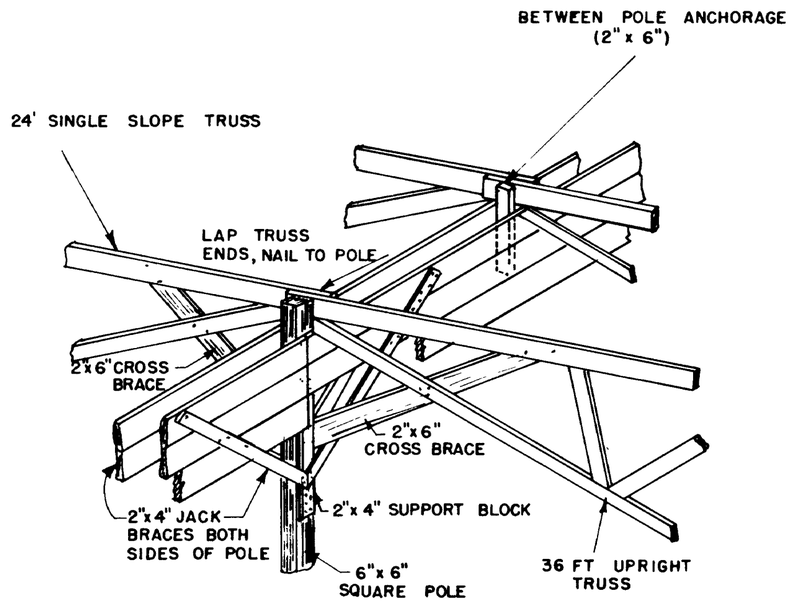

SIDEWALL POLE BRACING AND NAILING DETAIL

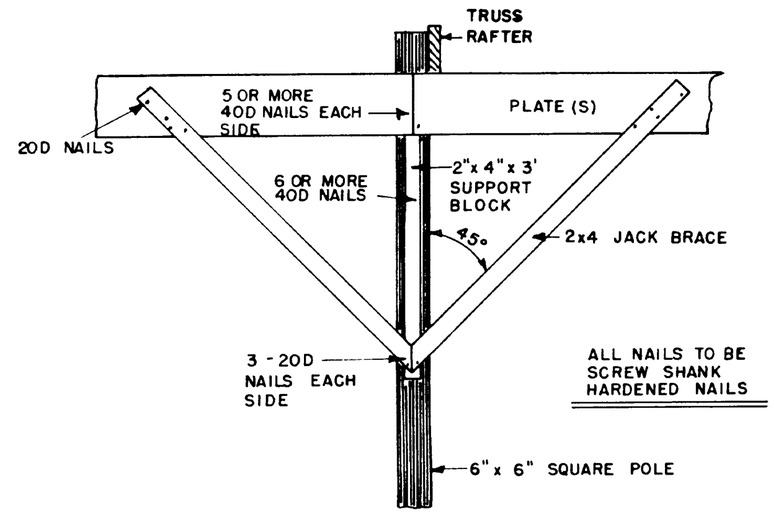

ROOFING DETAIL WITH PURLINS AND METAL ROOFING

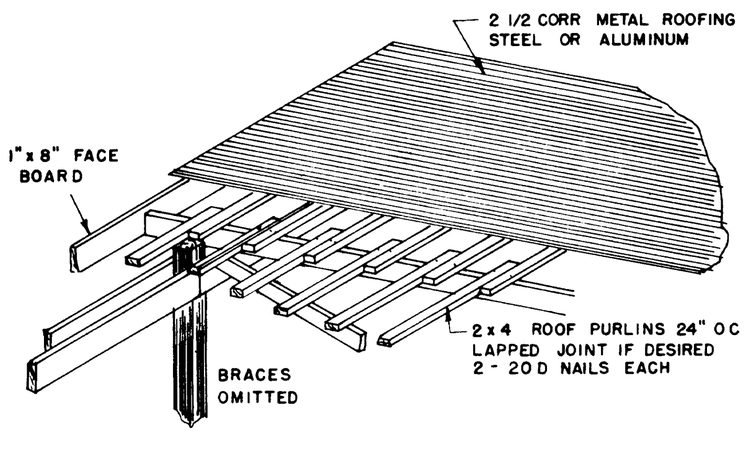

OPEN RIDGE VENT DETAIL

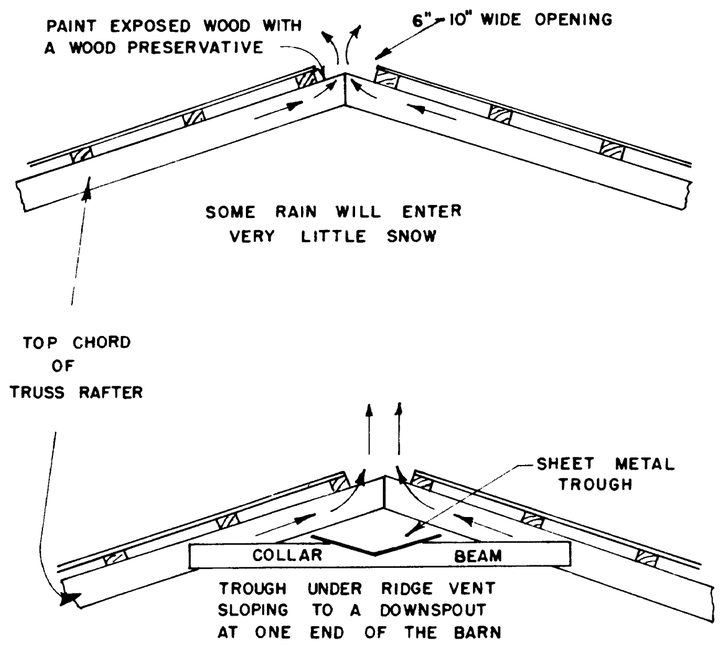

PANEL WINDOW DETAIL

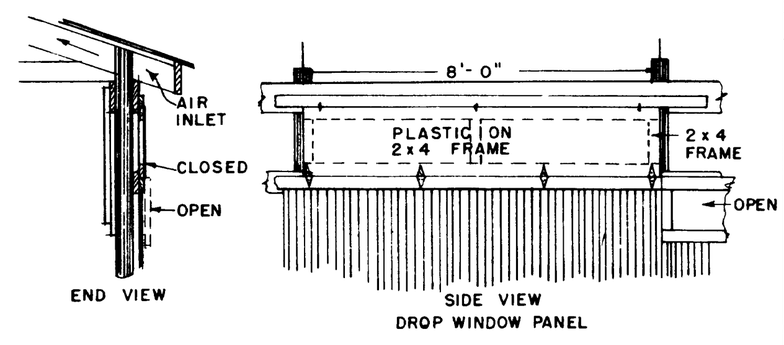

PANELS MAY BE HINGED EITHER AT THE BOTTOM OR TOP

COOPERATIVE EXTENSION WORK IN
AGRICULTURE AND HOME ECONOMICS
DEPARTMENT OF AGRICULTURAL ENGINEERING
COLLEGE OF AGRICULTURE
UNIVERSITY OF KENTUCKY
AND
UNITED STATES DEPARTMENT OF AGRICULTURE COOPERATING

FREE STALL BARN
DRIVE-THRU TYPE

PA	'71	6111	SHEET 3 OF 3

REVISED 1972

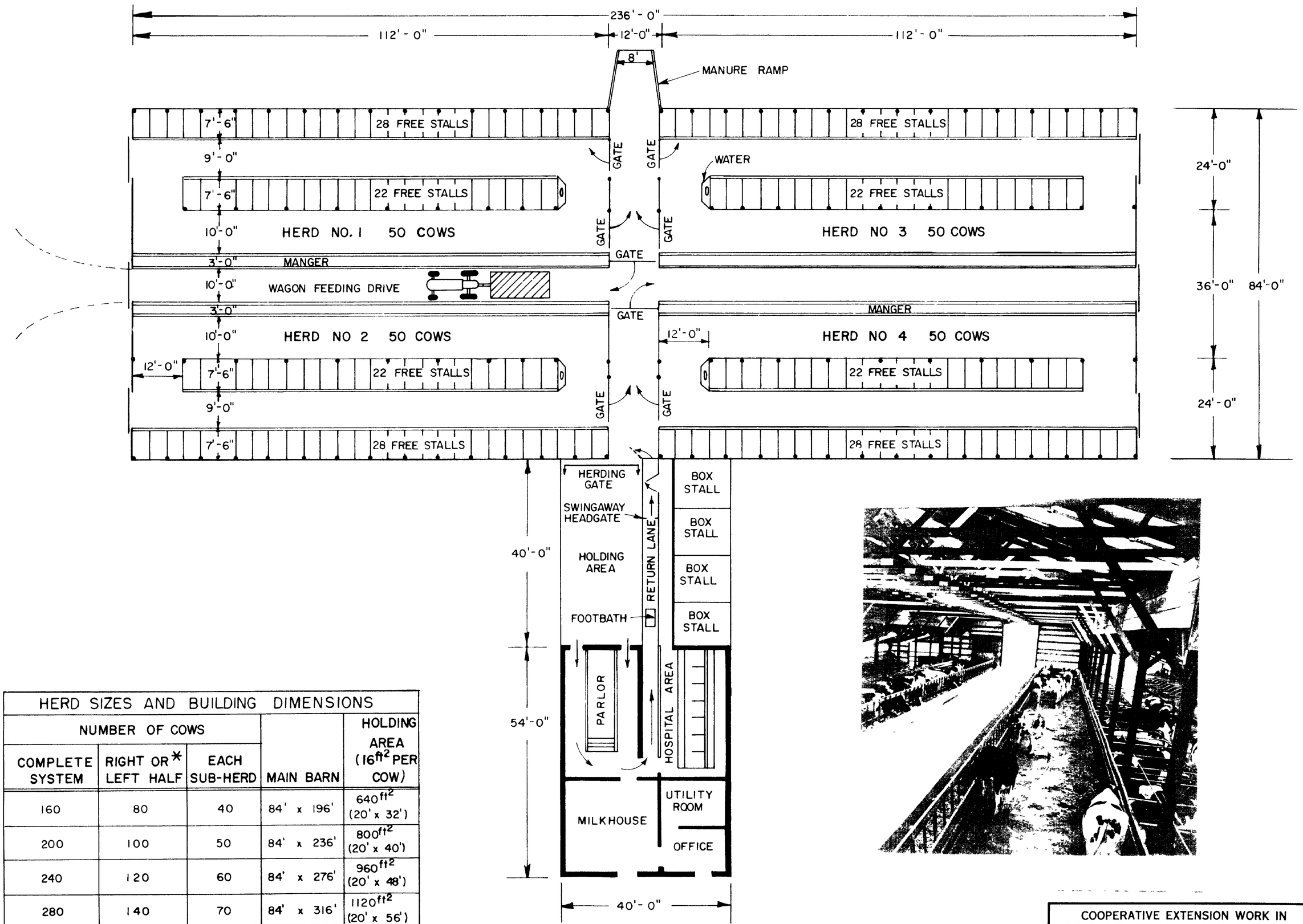

FLOOR PLAN

SCALE 1/16" = 1'- 0"

HERD SIZES AND BUILDING DIMENSIONS				
NUMBER OF COWS			MAIN BARN	HOLDING AREA ($16 ft^2$ PER COW)
COMPLETE SYSTEM	RIGHT OR* LEFT HALF	EACH SUB-HERD		
160	80	40	84' x 196'	$640 ft^2$ (20' x 32')
200	100	50	84' x 236'	$800 ft^2$ (20' x 40')
240	120	60	84' x 276'	$960 ft^2$ (20' x 48')
280	140	70	84' x 316'	$1120 ft^2$ (20' x 56')
320	160	80	84' x 356'	$1280 ft^2$ (20' x 64')

* BUILD EITHER THE RIGHT OR LEFT HALF OF THE FREE STALL BARN AND DIVIDE THE HERD INTO TWO GROUPS

"THESE PLANS ARE FOR USE AS A CONSTRUCTION GUIDE IF A CONSTRUCTION CONTRACT IS TO BE MADE, WRITTEN SPECIFICATIONS ARE NEEDED."

PENNSYLVANIA STATE UNIVERSITY NO 723 - 335

COOPERATIVE EXTENSION WORK IN
AGRICULTURE AND HOME ECONOMICS
DEPARTMENT OF AGRICULTURAL ENGINEERING
COLLEGE OF AGRICULTURE
UNIVERSITY OF KENTUCKY
AND
UNITED STATES DEPARTMENT OF AGRICULTURE COOPERATING

FREE STALL BARN
DRIVE-THRU TYPE

PA	'71	6111	SHEET 1 OF 3

REV FWB