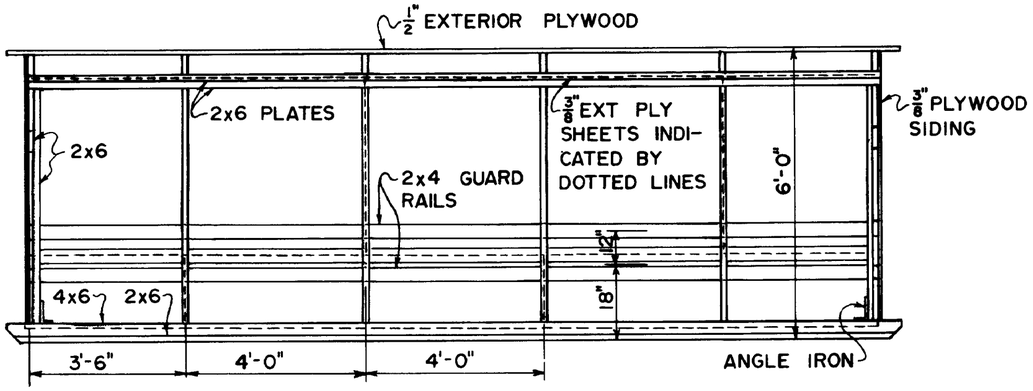

BACK SIDE FRAMING

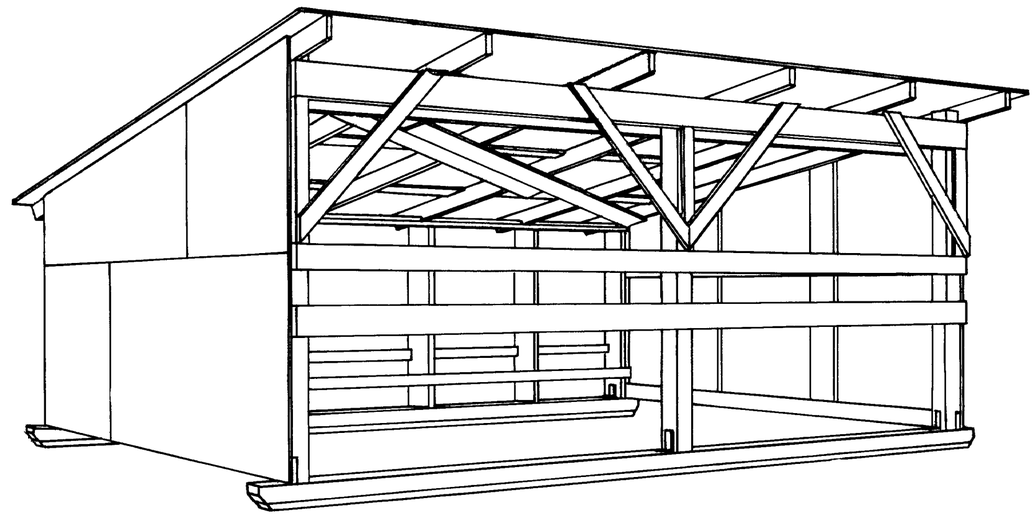

PERSPECTIVE

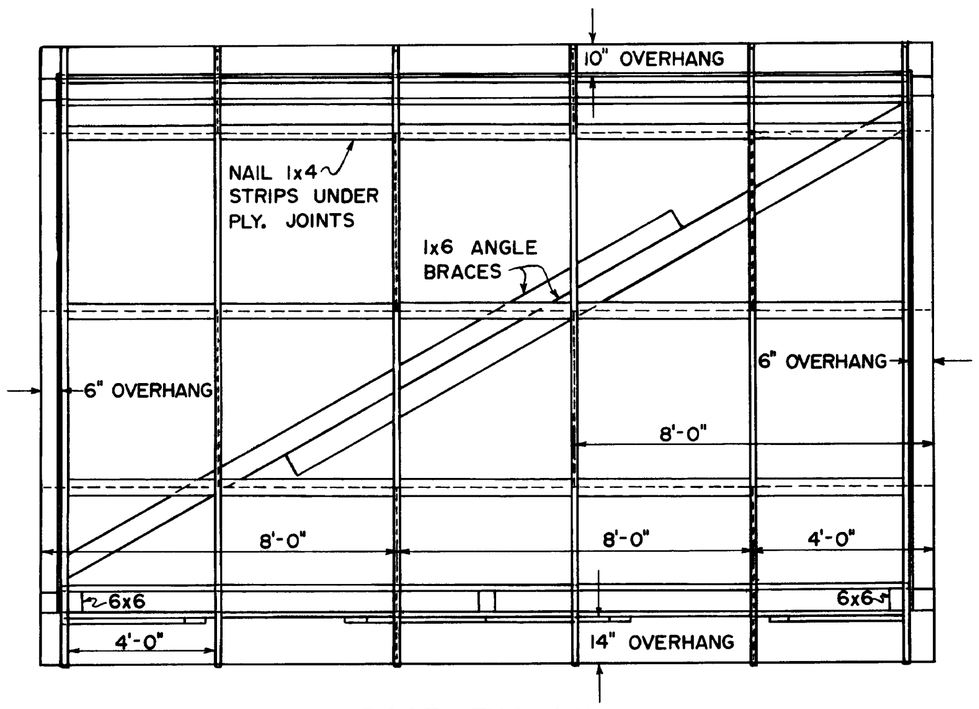

ROOF FRAMING

NOTES
PLYWOOD SHEETS INDICATED BY DOTTED LINES
COVER ROOF WITH ROLL ROOFING

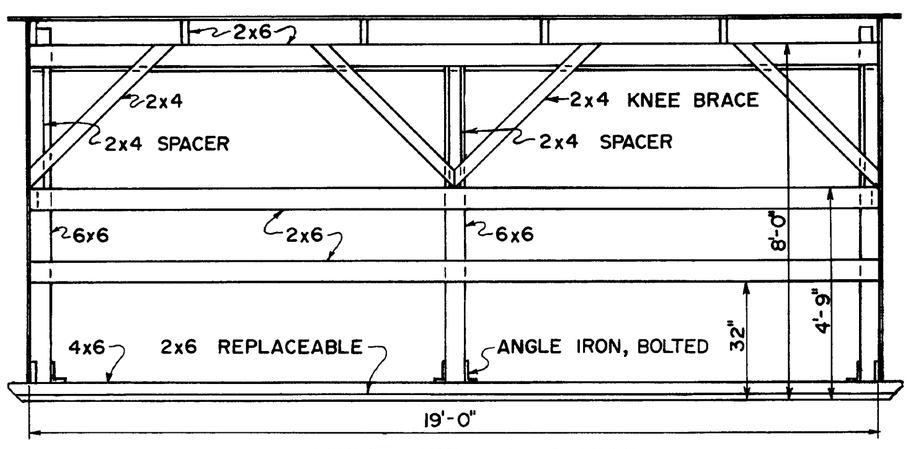

FRONT SIDE FRAMING

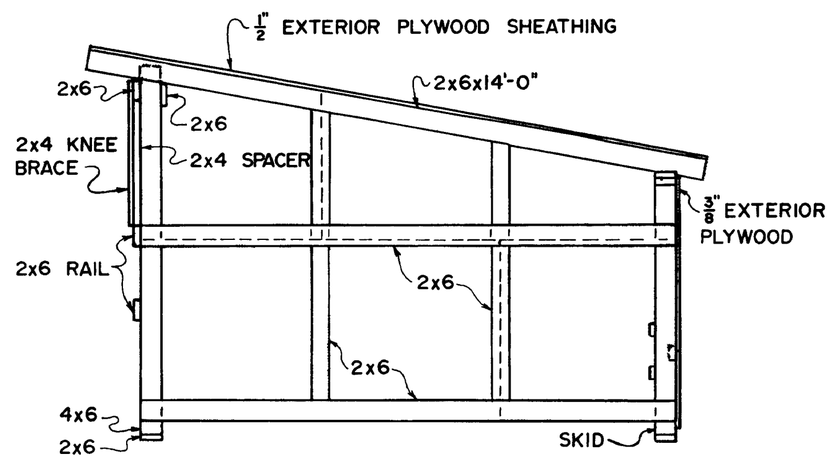

END FRAMING

ERIC B WILSON
WASHINGTON STATE UNIVERSITY No. 434

COOPERATIVE EXTENSION WORK IN
AGRICULTURE AND HOME ECONOMICS
DEPARTMENT OF AGRICULTURAL ENGINEERING
COLLEGE OF AGRICULTURE
UNIVERSITY OF KENTUCKY
AND
UNITED STATES DEPARTMENT OF AGRICULTURE COOPERATING

MOVABLE CALF SHELTER

WASH. '69	EX 6065	SHEET 1 OF 1

REVIEWED 1972