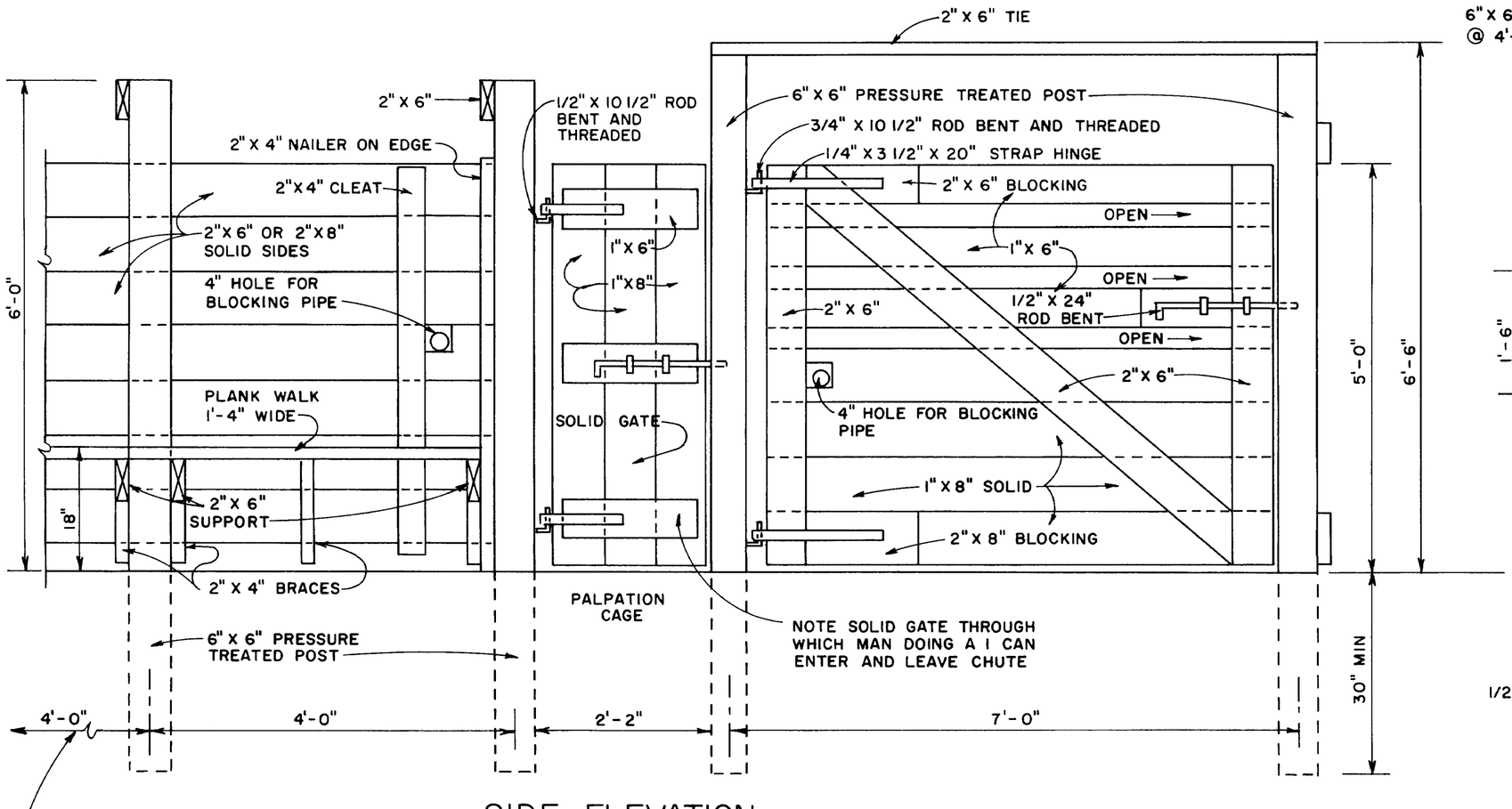

SIDE ELEVATION

SCALE 3/4"= 1'-0"

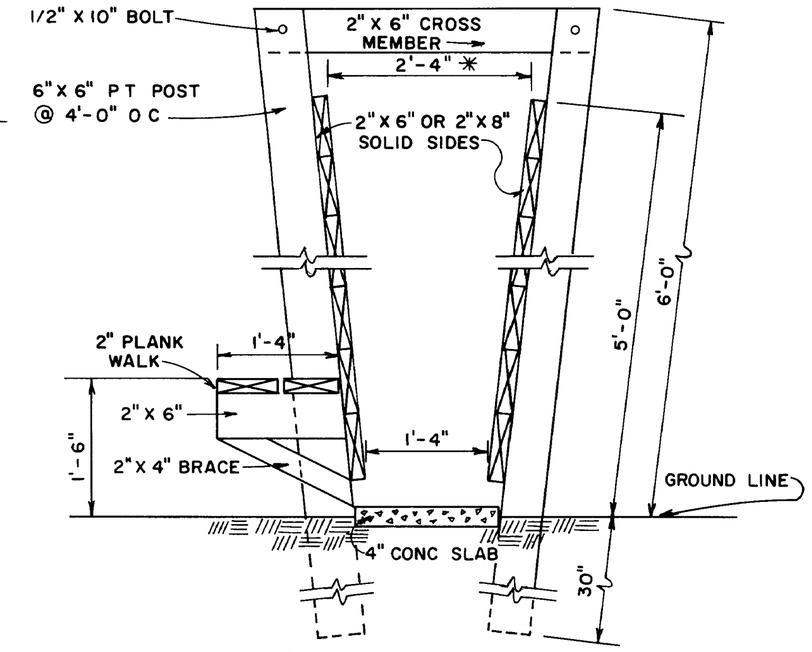

CROSS SECTION SLOPING SIDES

SCALE 3/4"=1'-0"

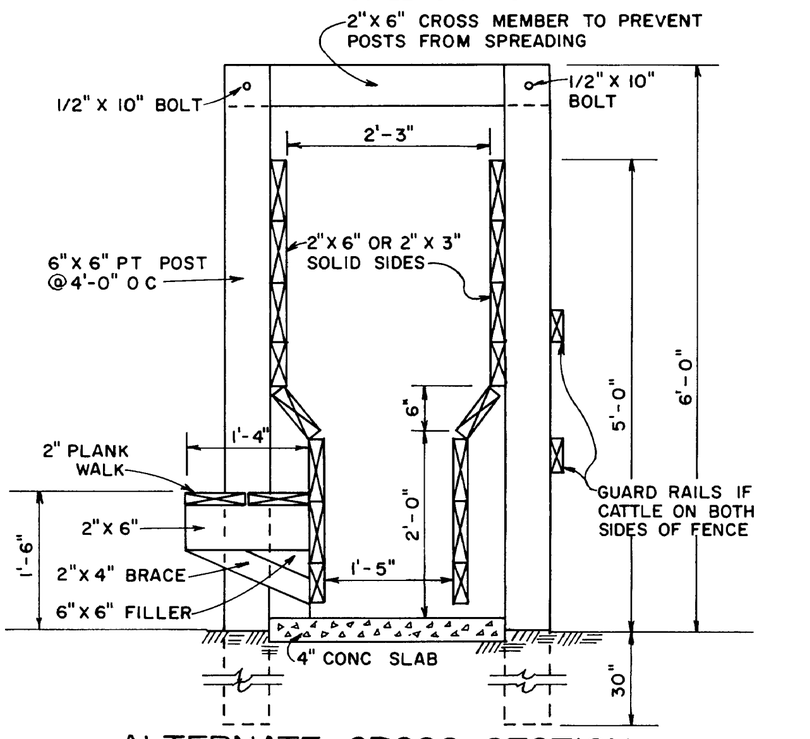

ALTERNATE CROSS SECTION STRAIGHT SIDES

SCALE: 3/4" = 1'-0"

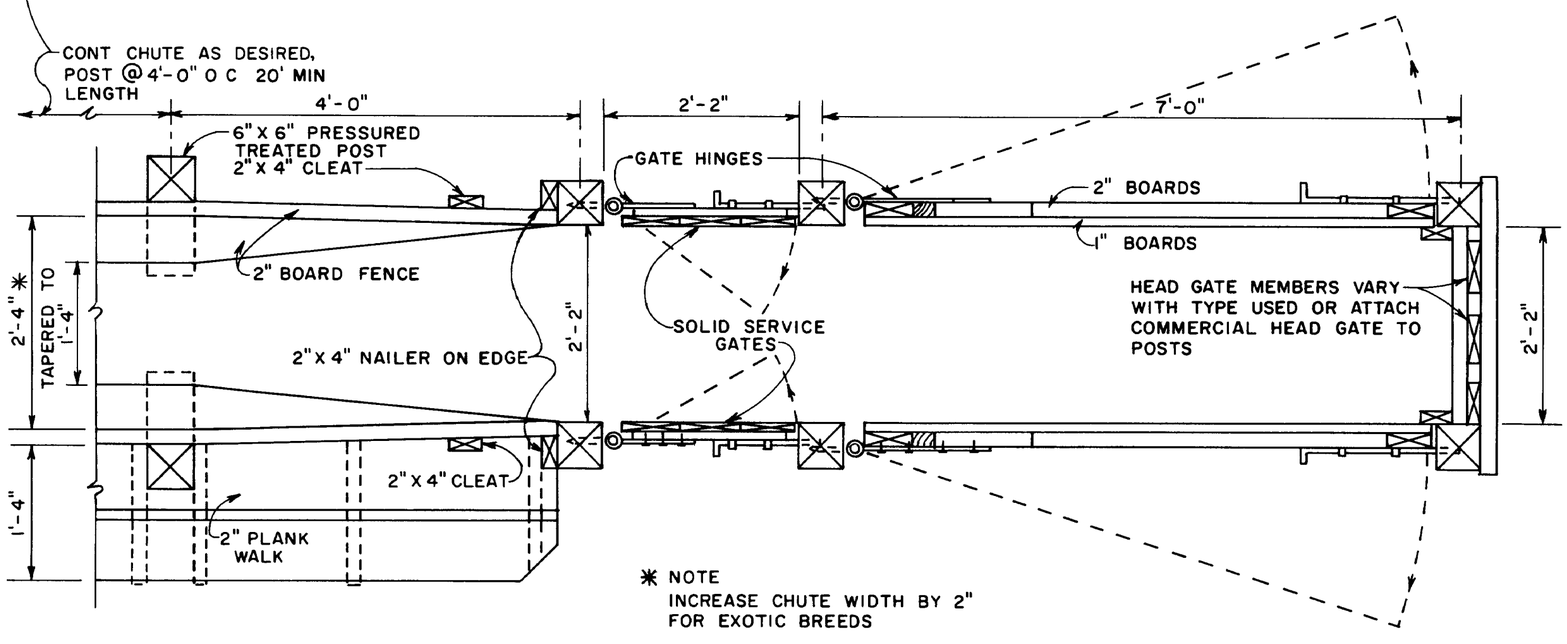

✳ NOTE
INCREASE CHUTE WIDTH BY 2" FOR EXOTIC BREEDS

PLAN VIEW

SCALE 3/4" = 1'-0"

NOTE

1 ALL WOOD IN CONTACT WITH EARTH SHOULD BE PRESSURE TREATED WITH PRESERVATIVE

2 FASTEN LUMBER TO POSTS WITH DEFORMED, HARDENED NAILS

CATTLE WORKING CHUTE

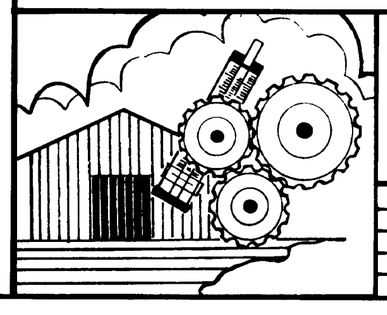

COOPERATIVE EXTENSION SERVICE
AGRICULTURE AND HOME ECONOMICS
DEPARTMENT OF AGRICULTURAL ENGINEERING
COLLEGE OF AGRICULTURE
UNIVERSITY OF KENTUCKY
AND
U S DEPARTMENT OF AGRICULTURE COOPERATING

DESIGNED BY LT AND S.M	SHEET 1 OF 1
CHECKED BY	PLAN NUMBER
DRAWN BY S.E.	KY. II. 881-1
DATE 3-86	
REVISIONS 6-86	

BRUNING 40 22 68210