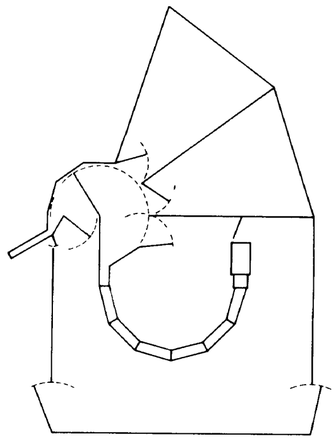

CAPACITY 70 HEAD

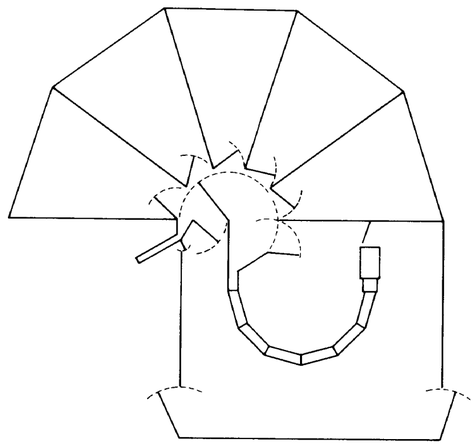

CAPACITY 175 HEAD

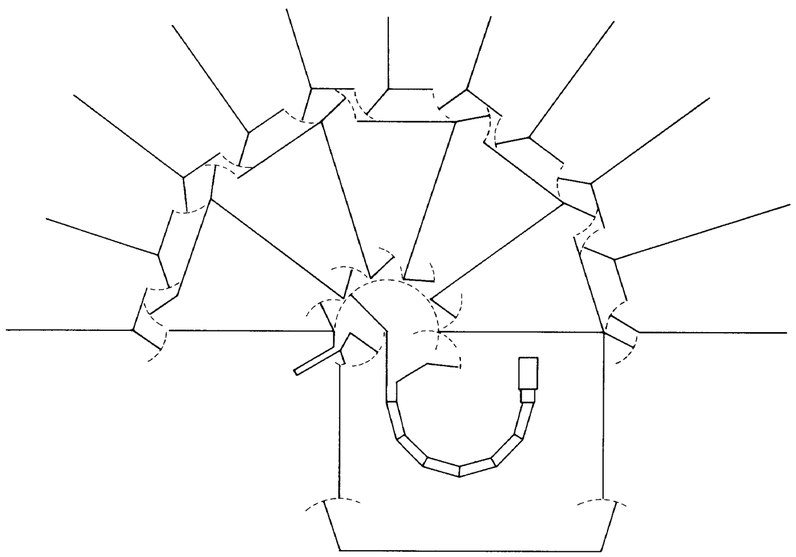

CAPACITY 200 HEAD OR MORE

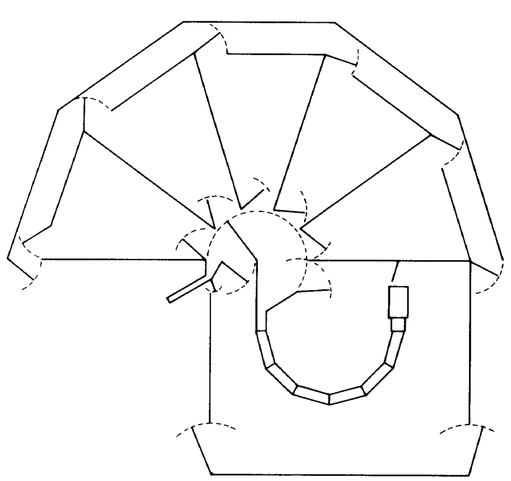

CAPACITY 175 HEAD

No Scale

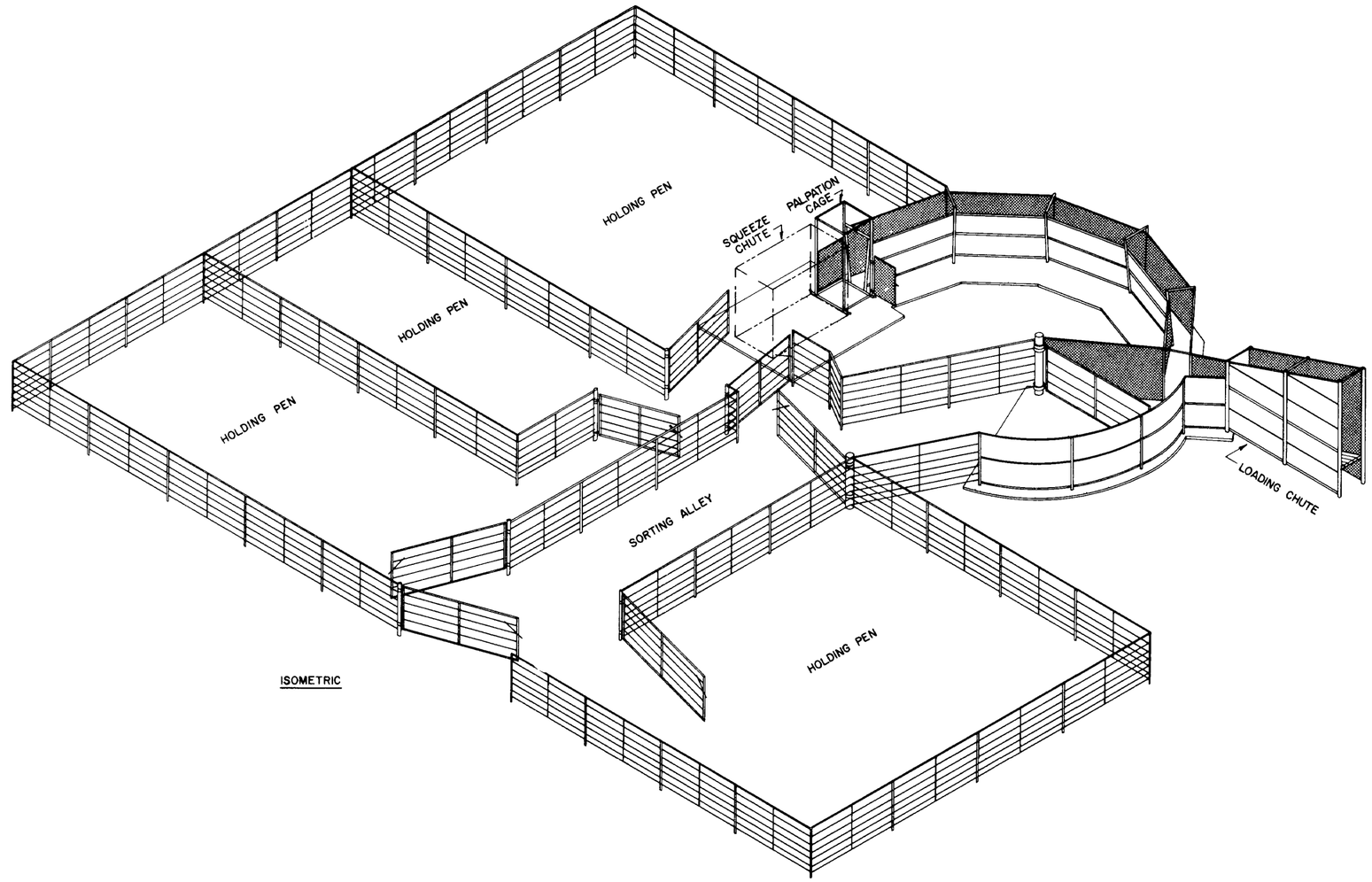

ISOMETRIC

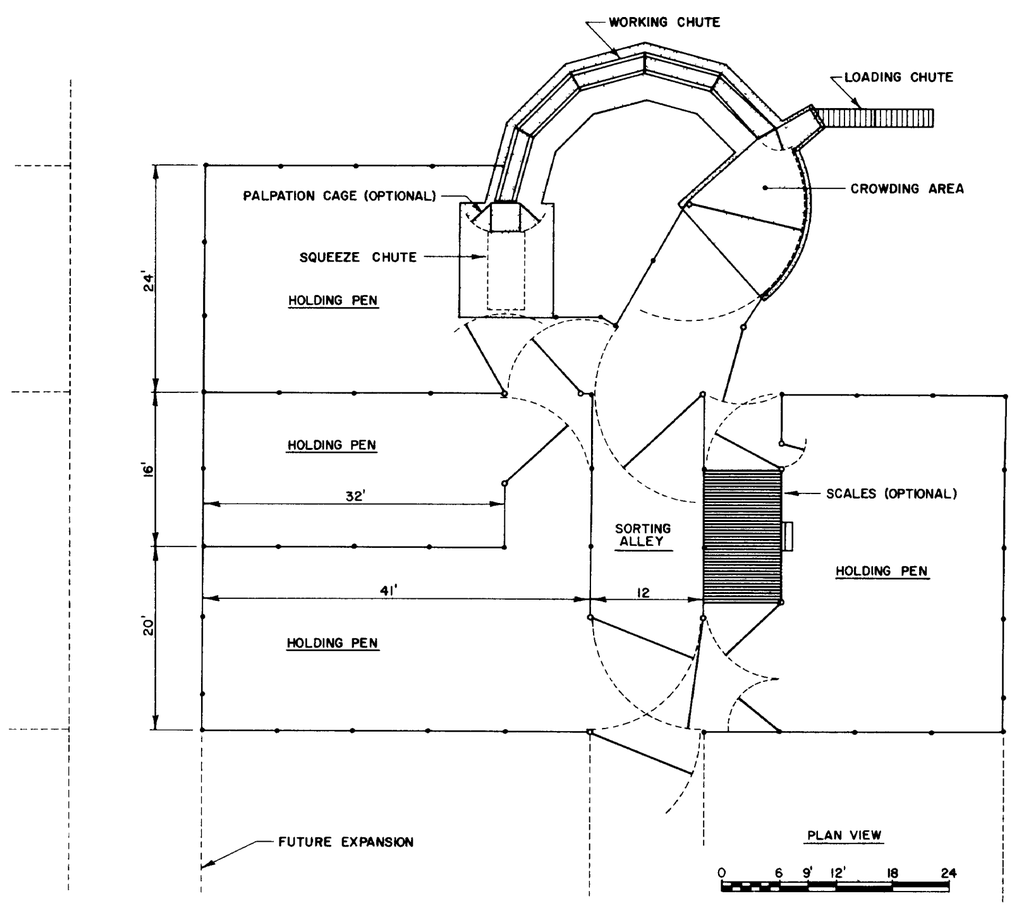

PLAN VIEW

COOPERATIVE EXTENSION WORK IN
AGRICULTURE AND HOME ECONOMICS

AND
UNITED STATES DEPARTMENT OF AGRICULTURE COOPERATING

EXPANSIBLE CORRALS

OK	'75	6229	SHEET 2 OF 4

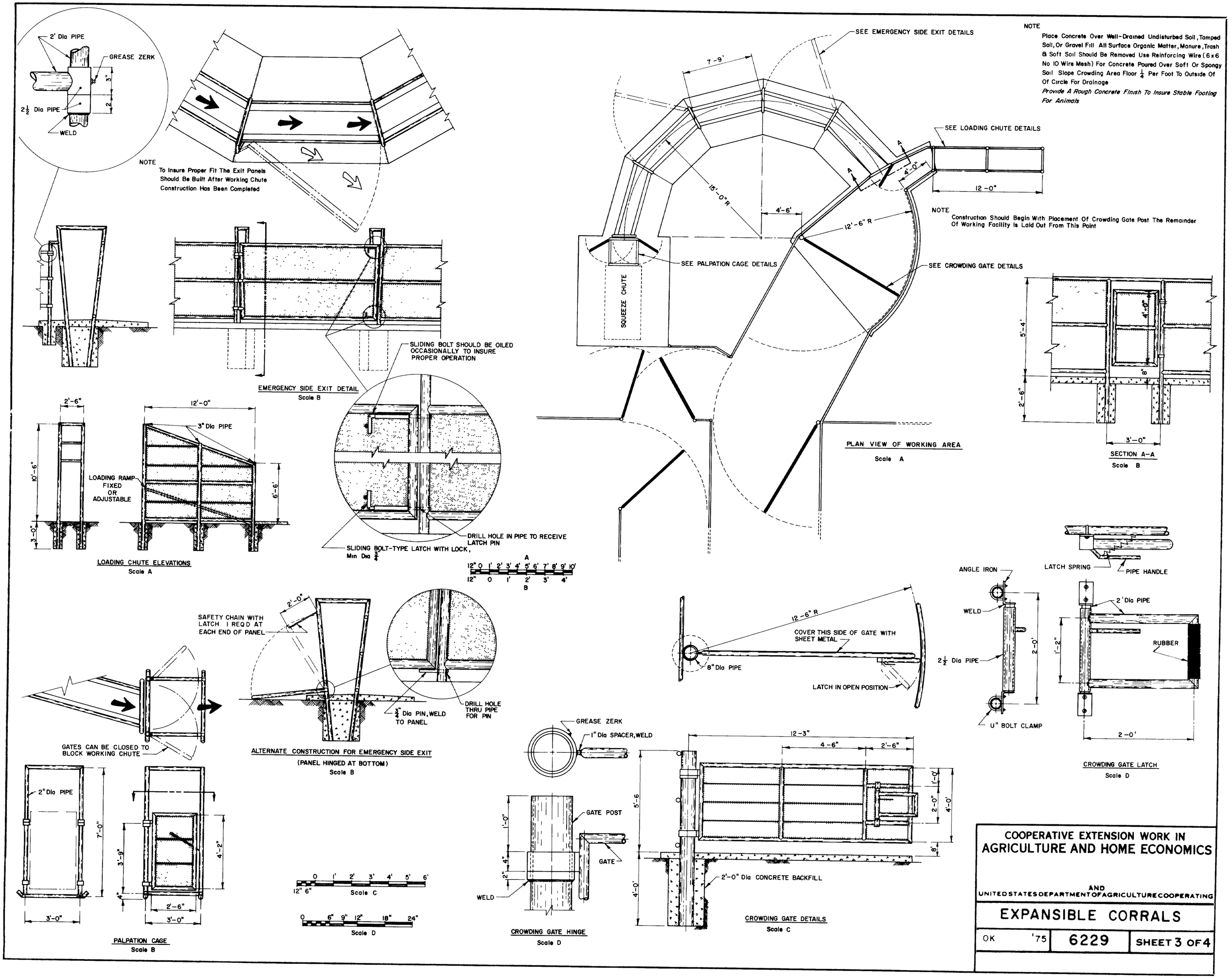
2' Dia PIPE
GREASE ZERK
3"
2
2½ Dia PIPE
WELD
NOTE
To Insure Proper Fit The Exit Panels Should Be Built After Working Chute Construction Has Been Completed
SLIDING BOLT SHOULD BE OILED OCCASIONALLY TO INSURE PROPER OPERATION
EMERGENCY SIDE EXIT DETAIL
Scale B
DRILL HOLE IN PIPE TO RECEIVE LATCH PIN
SLIDING BOLT-TYPE LATCH WITH LOCK, Min Dia ¾"
2'-6"
12'-0"
3" Dia PIPE
10'-6"
6'-6"
3'-0"
LOADING RAMP FIXED OR ADJUSTABLE
LOADING CHUTE ELEVATIONS
Scale A
A
12" 0 1' 2' 3' 4' 5' 6' 7' 8' 9' 10'
12" 0 1' 2' 3' 4'
B
SEE EMERGENCY SIDE EXIT DETAILS
7'-9'
15'-0" R
4'-6'
12'-6" R
SEE LOADING CHUTE DETAILS
4'-0"
12'-0"
NOTE
Place Concrete Over Well-Drained Undisturbed Soil, Tamped Soil, Or Gravel Fill All Surface Organic Matter, Manure, Trash & Soft Soil Should Be Removed Use Reinforcing Wire (6 x 6 No 10 Wire Mesh) For Concrete Poured Over Soft Or Spongy Soil Slope Crowding Area Floor ¼ Per Foot To Outside Of Of Circle For Drainage
Provide A Rough Concrete Finish To Insure Stable Footing For Animals
NOTE
Construction Should Begin With Placement Of Crowding Gate Post The Remainder Of Working Facility Is Laid Out From This Point
SEE PALPATION CAGE DETAILS
SEE CROWDING GATE DETAILS
SQUEEZE CHUTE
PLAN VIEW OF WORKING AREA
Scale A
5'-4'
4'-6"
8"
2'-6"
3'-0"
SECTION A-A
Scale B
SAFETY CHAIN WITH LATCH 1 REQ'D AT EACH END OF PANEL
2'-0"
¾" Dia PIN, WELD TO PANEL
DRILL HOLE THRU PIPE FOR PIN
GATES CAN BE CLOSED TO BLOCK WORKING CHUTE
ALTERNATE CONSTRUCTION FOR EMERGENCY SIDE EXIT
(PANEL HINGED AT BOTTOM)
Scale B
12'-6" R
COVER THIS SIDE OF GATE WITH SHEET METAL
8" Dia PIPE
LATCH IN OPEN POSITION
ANGLE IRON
WELD
2½ Dia PIPE
2'-0"
U" BOLT CLAMP
LATCH SPRING
PIPE HANDLE
2' Dia PIPE
1'-2"
RUBBER
2'-0'
CROWDING GATE LATCH
Scale D
GREASE ZERK
1" Dia SPACER, WELD
2" Dia PIPE
7'-0"
3'-9"
4'-2"
4"
2'-6"
3'-0"
PALPATION CAGE
Scale B
0 1' 2' 3' 4' 5' 6'
12" 6"
Scale C
0 6" 9" 12" 18" 24"
Scale D
1'-0"
4"
2"
GATE POST
GATE
WELD
CROWDING GATE HINGE
Scale D
12'-3"
4'-6"
2'-6"
5'-6
1'-0'
2'-0"
4'-0'
8'
4'-0'
2'-0" Dia CONCRETE BACKFILL
CROWDING GATE DETAILS
Scale C
COOPERATIVE EXTENSION WORK IN AGRICULTURE AND HOME ECONOMICS
AND
UNITED STATES DEPARTMENT OF AGRICULTURE COOPERATING
EXPANSIBLE CORRALS
OK '75
6229
SHEET 3 OF 4

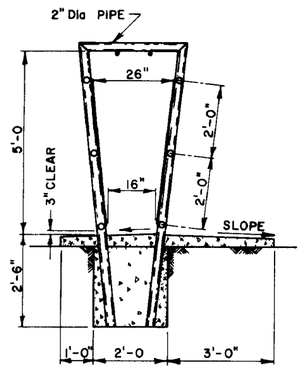

SECTION B-B

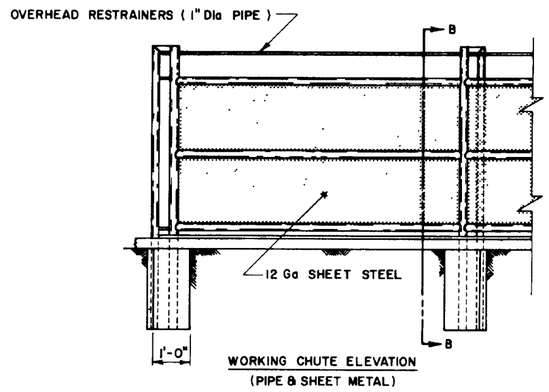

WORKING CHUTE ELEVATION
(PIPE & SHEET METAL)

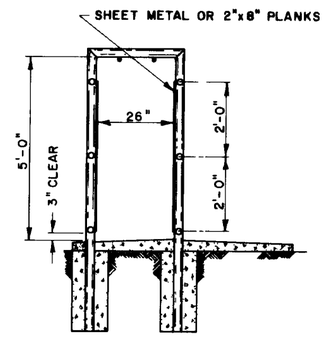

ALTERNATE CONSTRUCTION FOR
WORKING CHUTE

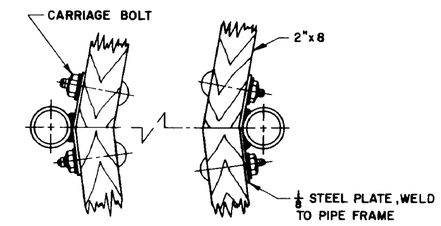

PLANK FASTENING DETAIL
No Scale

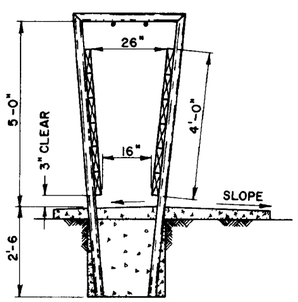

SECTION C-C

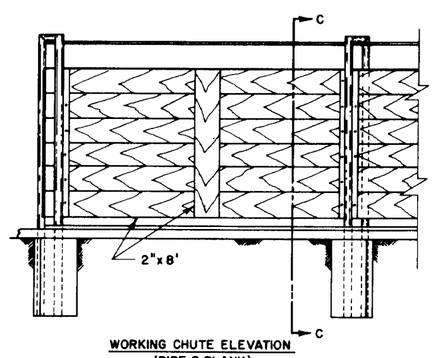

WORKING CHUTE ELEVATION
(PIPE & PLANK)

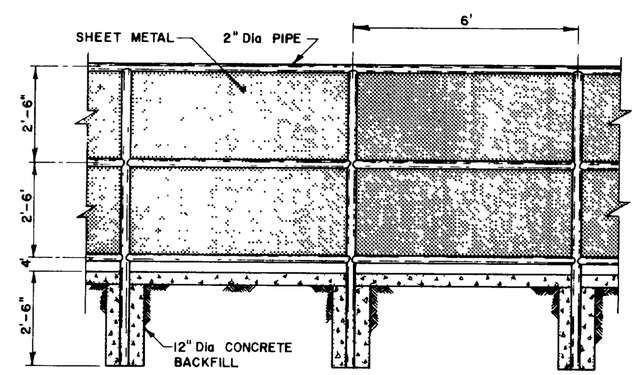

CROWDING AREA FENCE

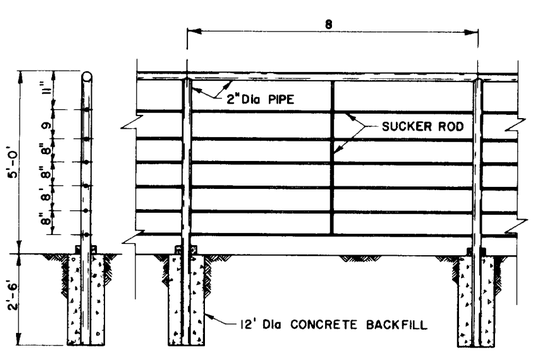

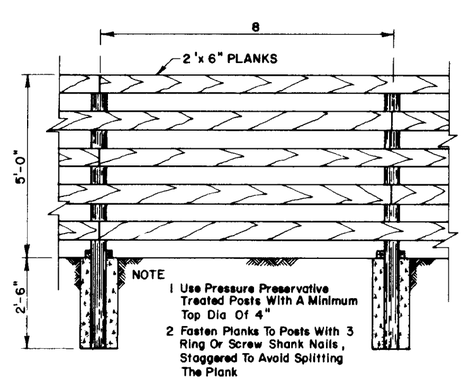

TYPICAL FENCE DETAILS

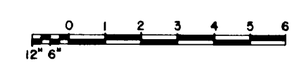

COOPERATIVE EXTENSION WORK IN
AGRICULTURE AND HOME ECONOMICS

AND
UNITED STATES DEPARTMENT OF AGRICULTURE COOPERATING

EXPANSIBLE CORRALS

OK '75	6229	SHEET 4 OF 4

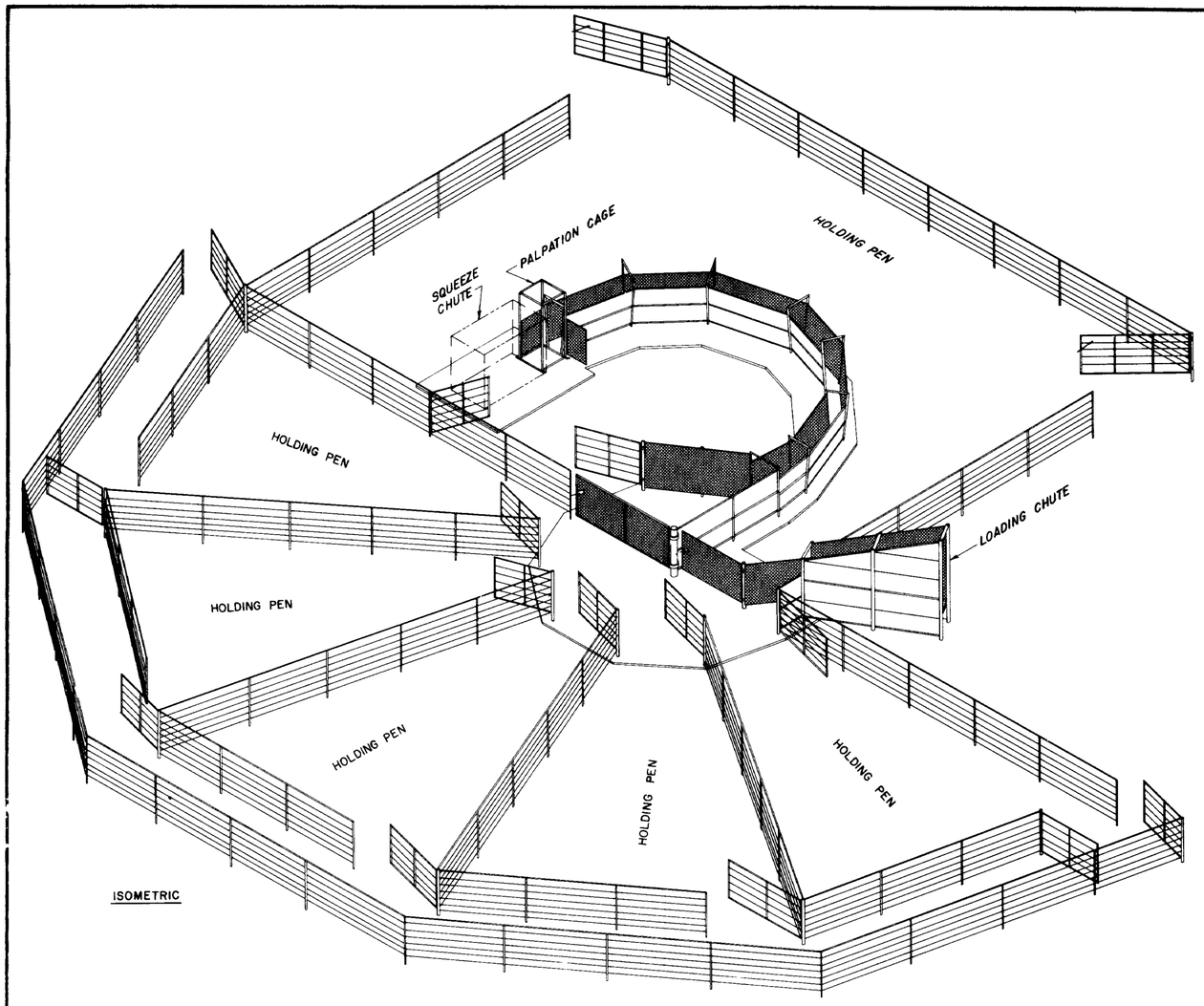

ISOMETRIC

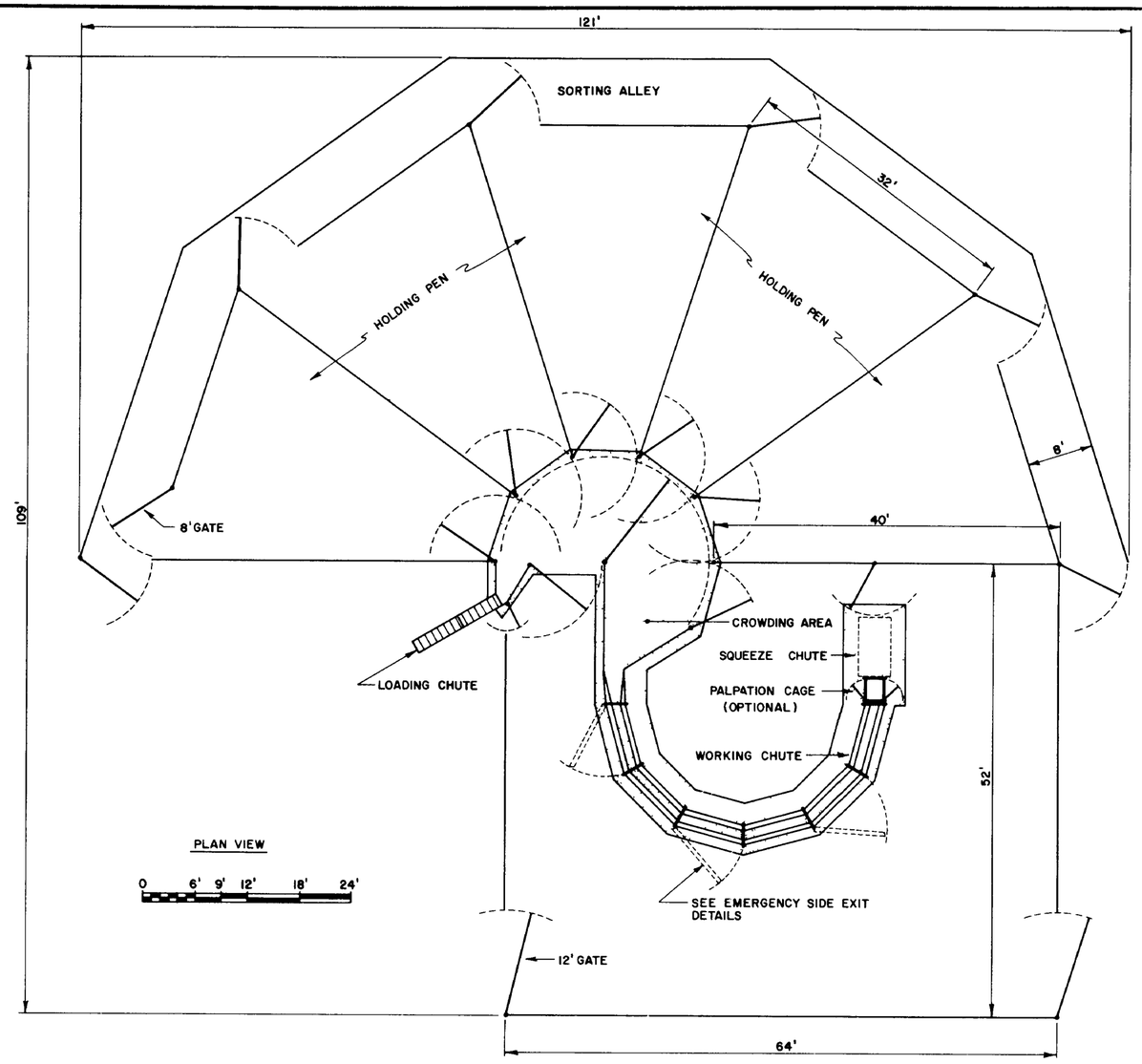

PLAN VIEW

NOTES

1. Construction Should Begin With Placement Of Crowding Gate Post, The Remainder Of Working Facility Is Laid Out From This Point
2. Place Concrete Over Well-Drained, Undisturbed Soil, Tamped Soil, Or Gravel Fill All Surface Organic Matter, Manure, Trash, & Soft Soil Should Be Removed
3. Use Reinforcing Wire (6x6 No 10 Wire Mesh) For Concrete Poured Over Soft Or Spongy Soil
4. Slope Crowding Area Floor $\frac{1}{4}$ Per Foot To Outside Of Circle For Drainage
5. *Provide A Rough Concrete Finish To Insure Stable Footing For Animals*

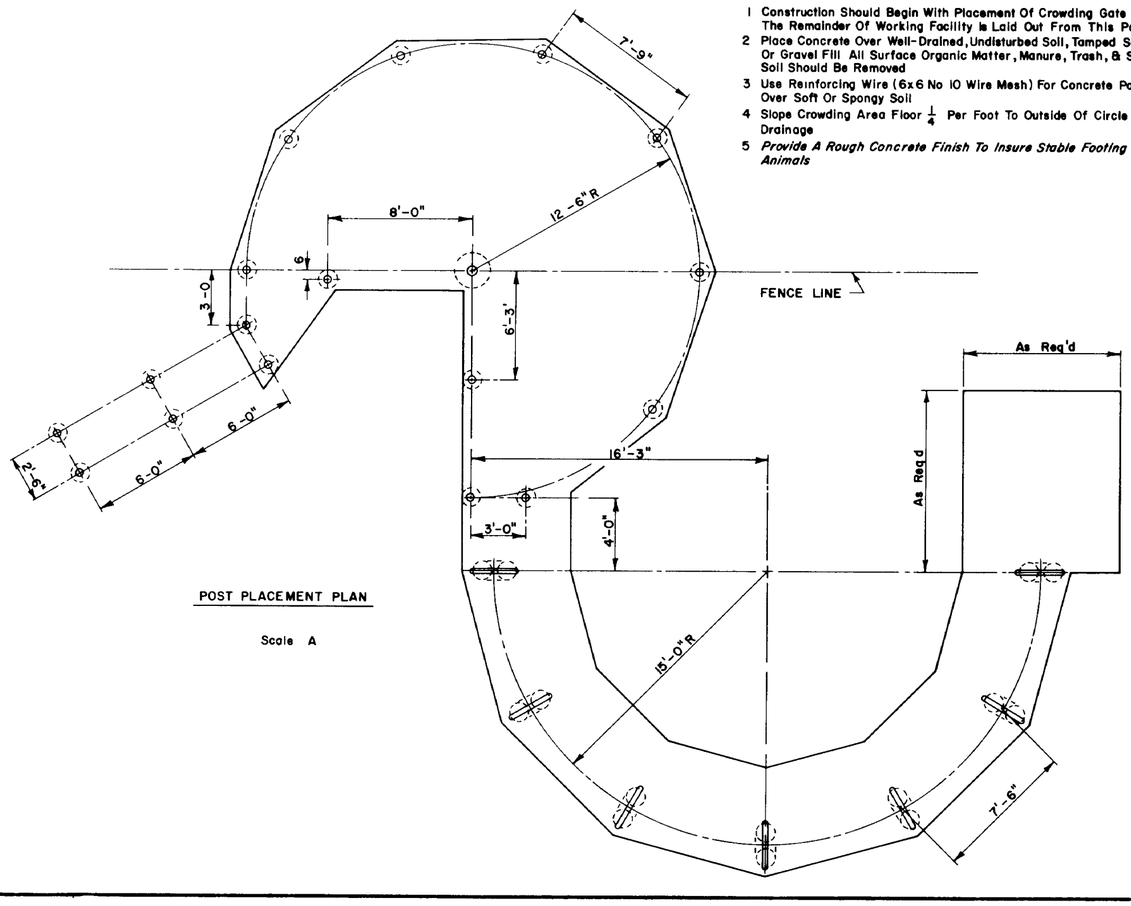

POST PLACEMENT PLAN

Scale A

NOTE

CONSULT LOCAL HEALTH AND BUILDING CODE AUTHORITIES BEFORE STARTING CONSTRUCTION.

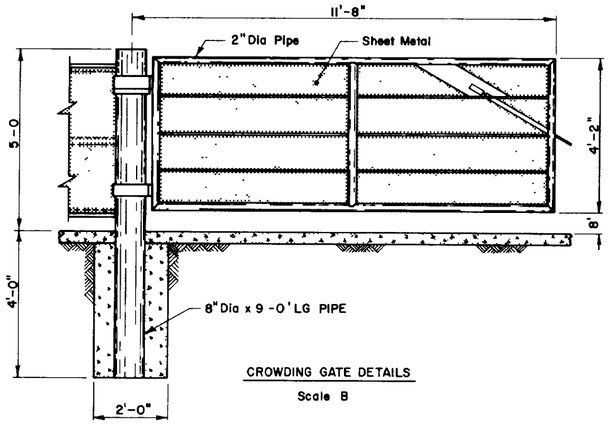

CROWDING GATE DETAILS

Scale B

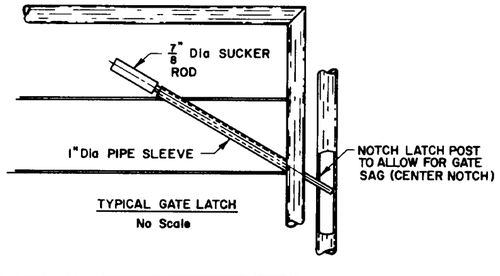

TYPICAL GATE LATCH

No Scale

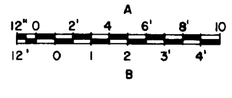

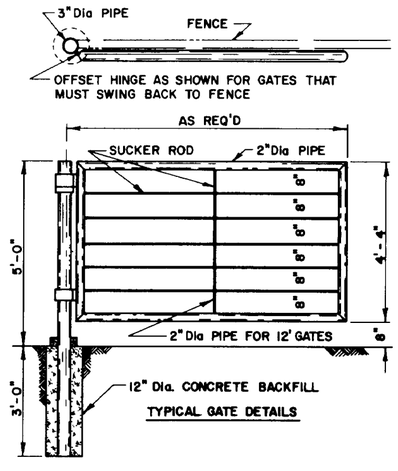

TYPICAL GATE DETAILS

BASED ON OKLAHOMA STATE UNIV PLAN NO 724-25 & 724-26

COOPERATIVE EXTENSION WORK IN AGRICULTURE AND HOME ECONOMICS

AND

UNITED STATES DEPARTMENT OF AGRICULTURE COOPERATING

EXPANSIBLE CORRALS

OK	'75	6229	SHEET 1 OF 4