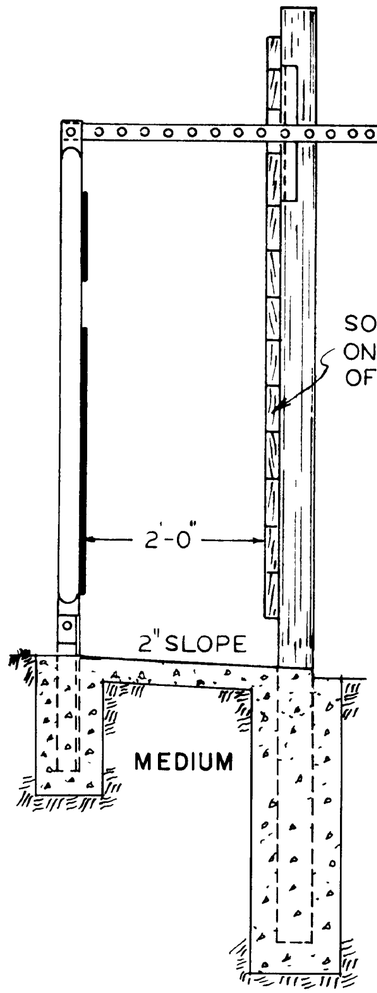

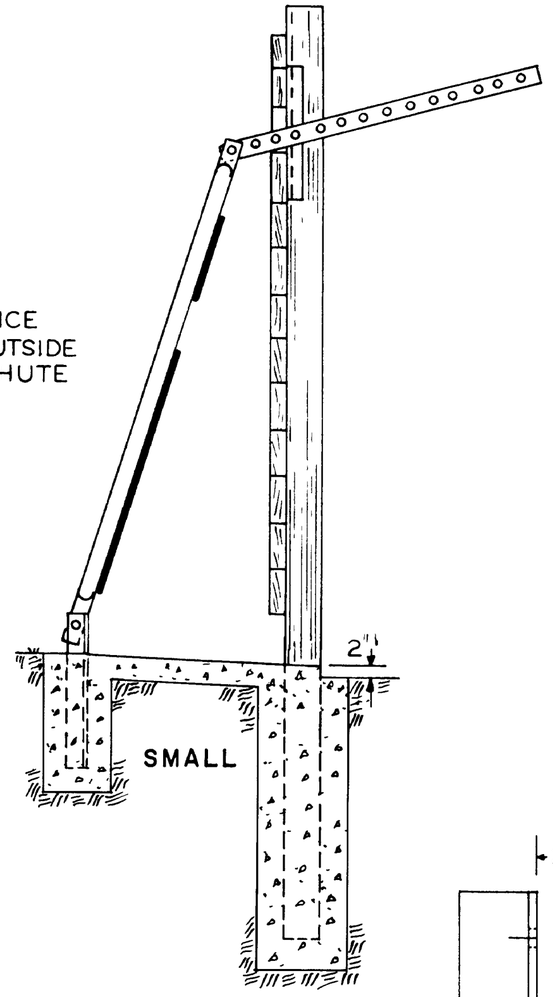

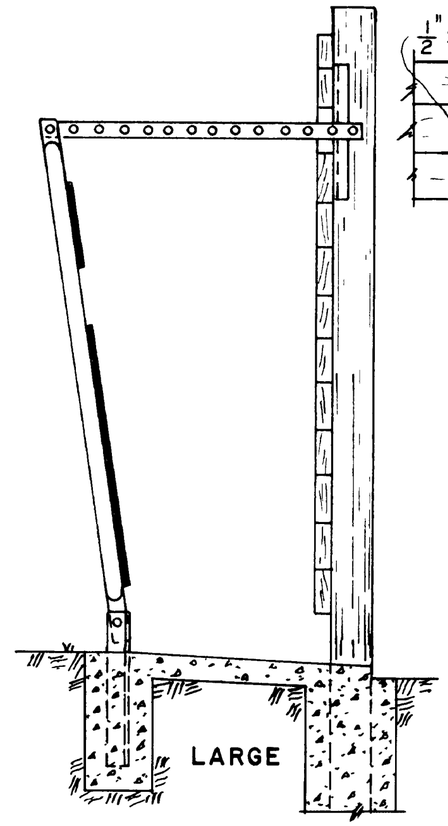

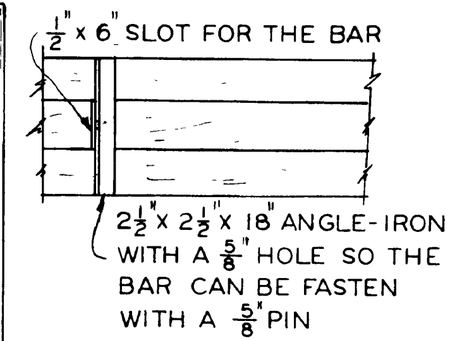

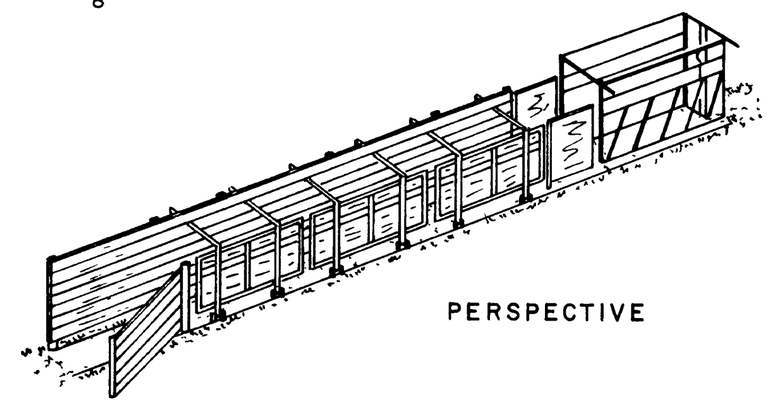

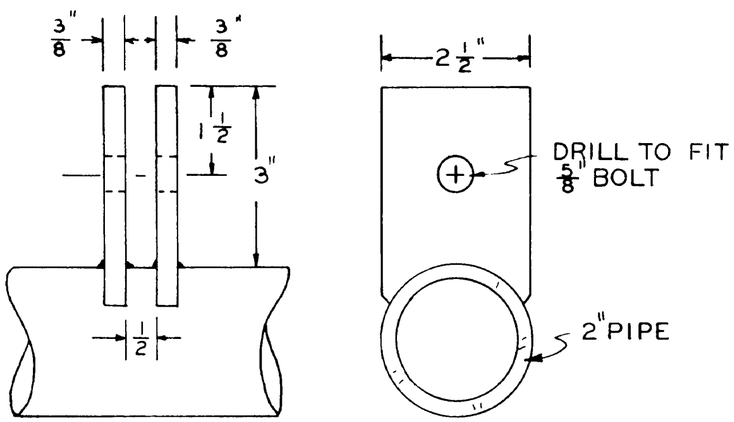

DETAIL A
HALF SIZE

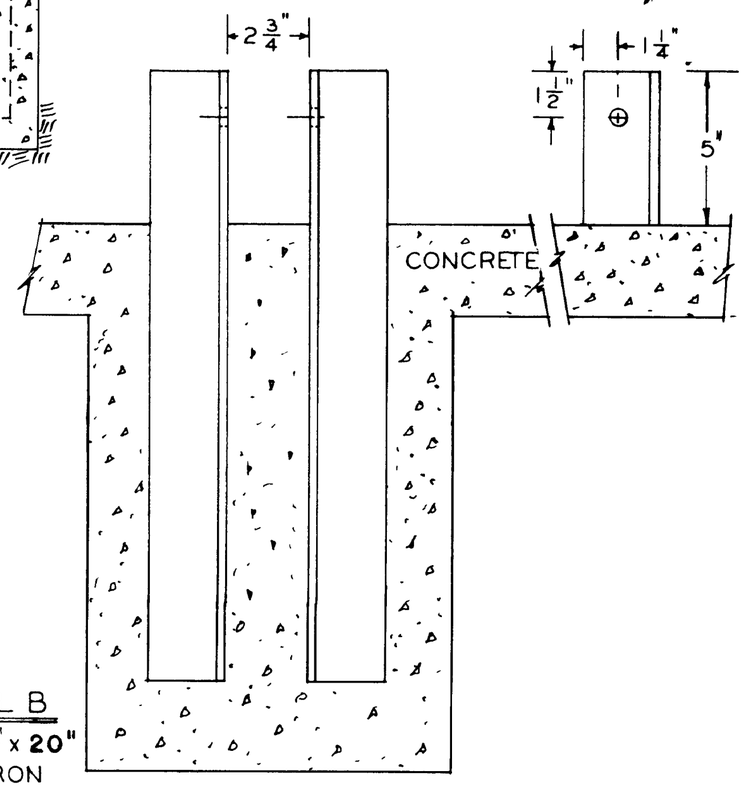

DETAIL B
2 1/2" x 2 1/2" x 1/4" x 20"
ANGLE IRON

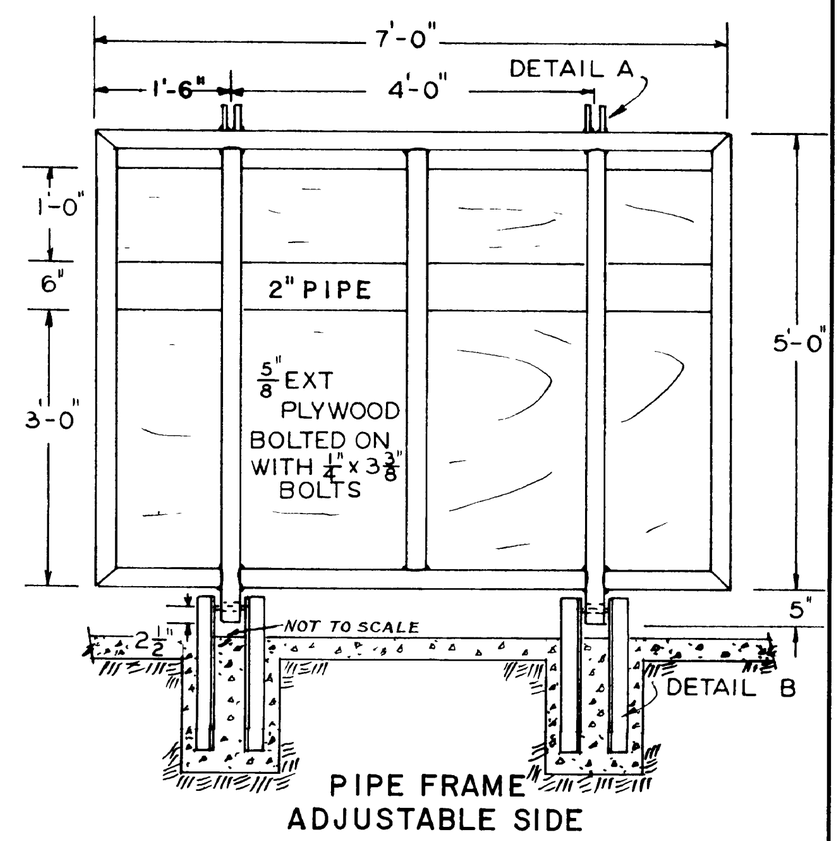

PIPE FRAME
ADJUSTABLE SIDE

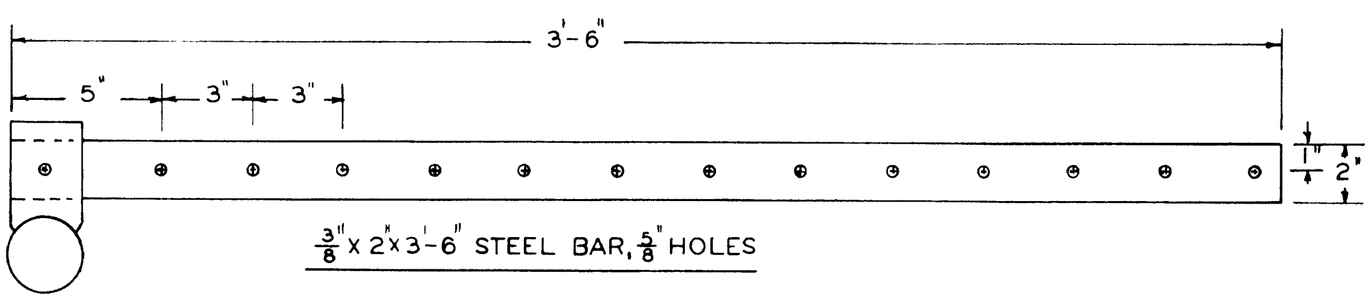

3/8" x 2" x 3'-6" STEEL BAR, 5/8" HOLES

BASED ON OREGON STATE UNIV
PLAN NO BP 1110

COOPERATIVE EXTENSION WORK IN
AGRICULTURE AND HOME ECONOMICS
DEPARTMENT OF AGRICULTURAL ENGINEERING
COLLEGE OF AGRICULTURE
UNIVERSITY OF KENTUCKY
AND
UNITED STATES DEPARTMENT OF AGRICULTURE COOPERATING

CATTLE CHUTE
ADJUSTABLE TYPE

ORE	'72	6153	SHEET 1 OF 1