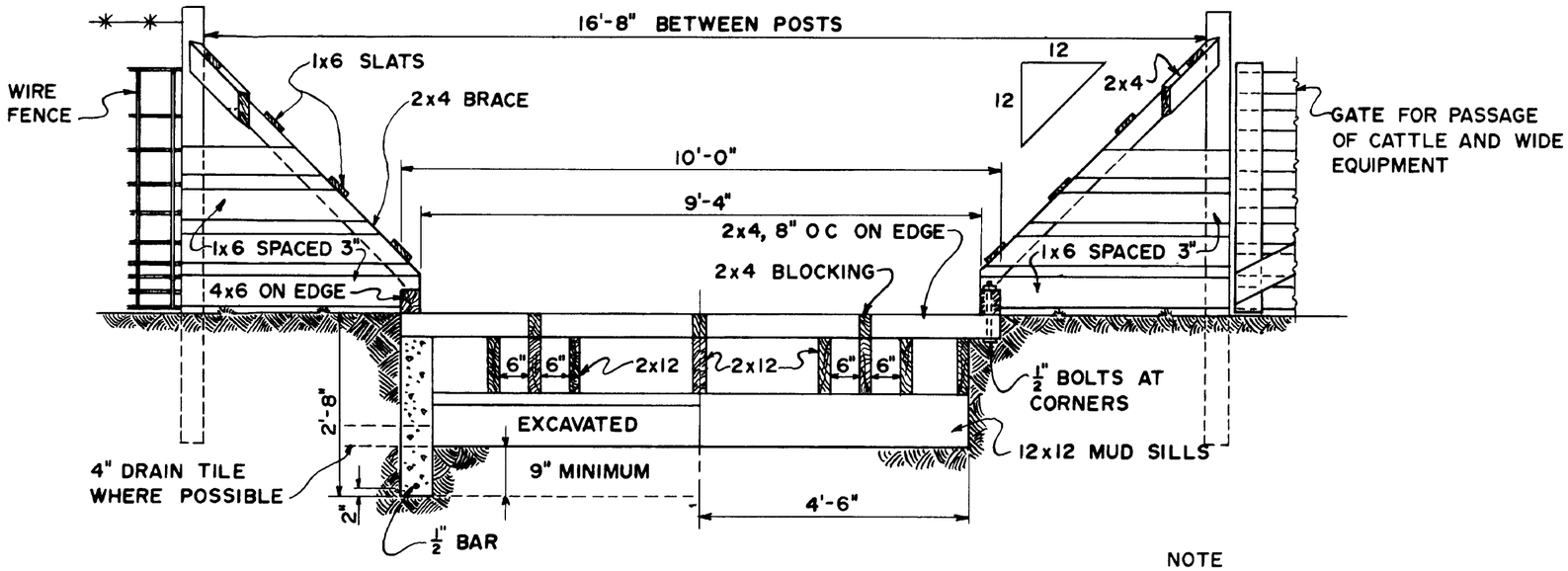

SECTION A-A

NOTE
SECTION A-A SHOWS GUARD FLOOR BUILT LEVEL WITH GRADE
SECTION B-B SHOWS GUARD FLOOR RAISED ABOVE GRADE.

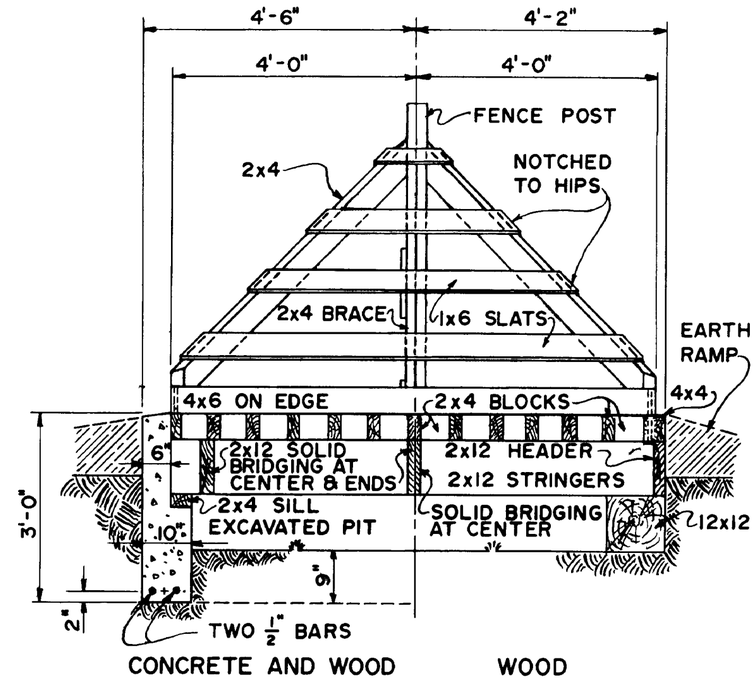

SECTION B-B

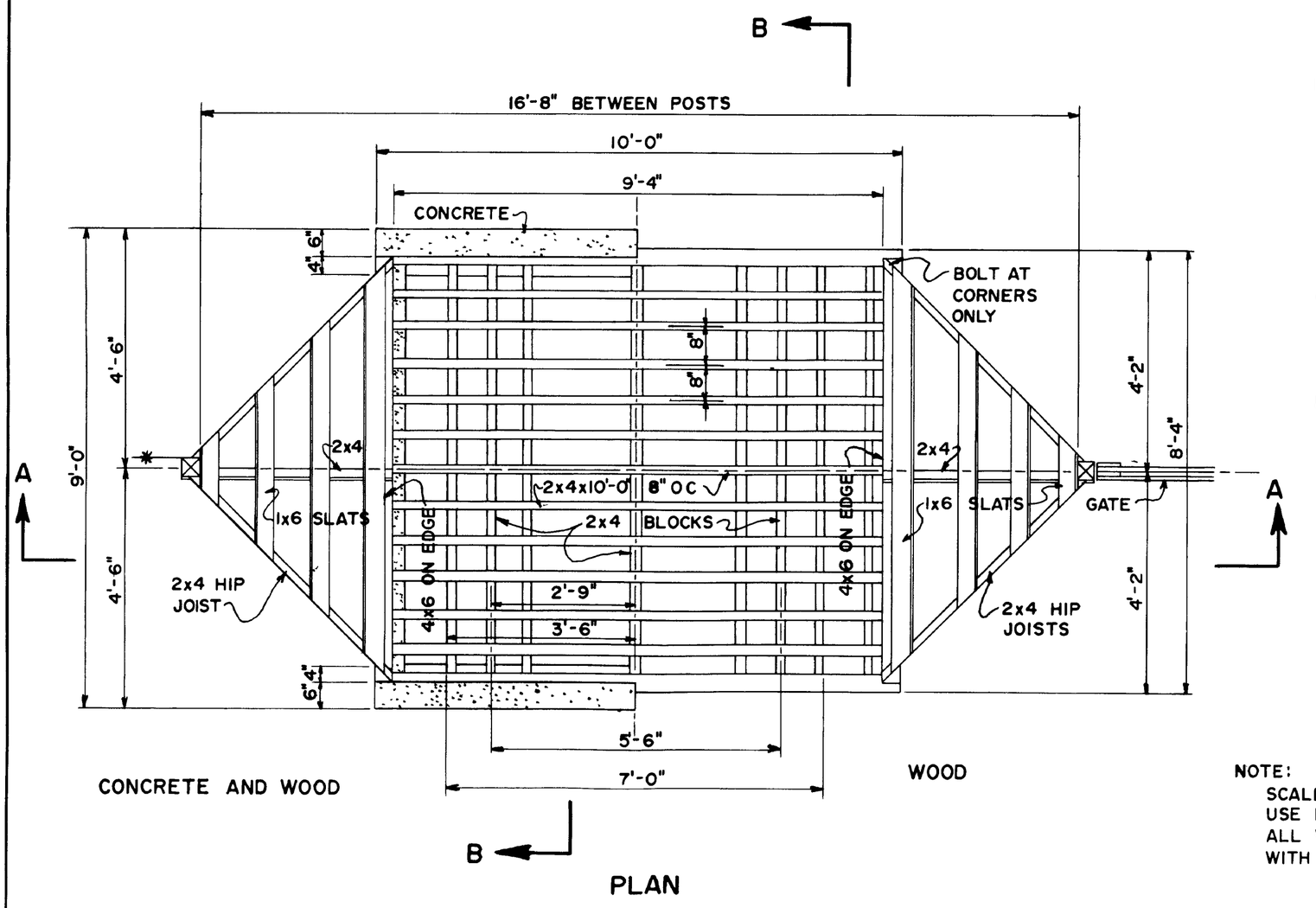

PLAN

BILLS OF MATERIAL

CONCRETE AND WOOD		WOOD	
LUMBER		LUMBER	
FENCE POSTS:	2-PCS 4x4x7'-0"	FENCE POSTS	2-PCS 4x4x7'-0"
FRAMING	3-PCS 2x12x10'-0"	FRAMING	2-PCS 12x12x9'-0"
	7-PCS 2x12x8'-0"		2-PCS 4x4x10'-0"
	13-PCS 2x4x10'-0"		3-PCS 2x12x10'-0"
	2-PCS 2x4x9'-0"		9-PCS 2x12x8'-0"
	3-PCS 2x4x8'-0"		11-PCS 2x4x10'-0"
	6-PCS 2x4x6'-0"		3-PCS 2x4x8'-0"
SLATS	9-PCS 1x6x8'-0"		6-PCS 2x4x6'-0"
GUARD RAILS:	2-PCS 4x6x8'-0"	SLATS:	9-PCS 1x6x8'-0"
CONCRETE	2 1/2 CU YDS (1 3 5 MIXTURE)	GUARD RAILS.	2-PCS 4x6x8'-0"
		MISCELLANEOUS	
CEMENT:	12 SACKS	ANCHOR BOLTS:	FOUR 1/2"x12" GALV
SAND	1 25 CU YDS.		
AGGREGATE:	2 13 CU YDS		
MISCELLANEOUS			
ANCHOR BOLTS	FOUR 1/2"x12" GALV		
REINF RODS:	FOUR 1/2" x 9'-9"		
	TWO 1/2" x 8'-9"		

NOTE:
SCALE: 1/2" = 1'-0"
USE ROUGH-SAWN LUMBER.
ALL WOOD IS TO BE PRESSURE-TREATED WITH PRESERVATIVE.

COOPERATIVE EXTENSION WORK IN
AGRICULTURE AND HOME ECONOMICS
UNIVERSITY OF KENTUCKY
AND
UNITED STATES DEPARTMENT OF AGRICULTURE COOPERATING

CATTLE GUARDS

USDA '68	EX 6051	SHEET 2 OF 2

REVISED 1972

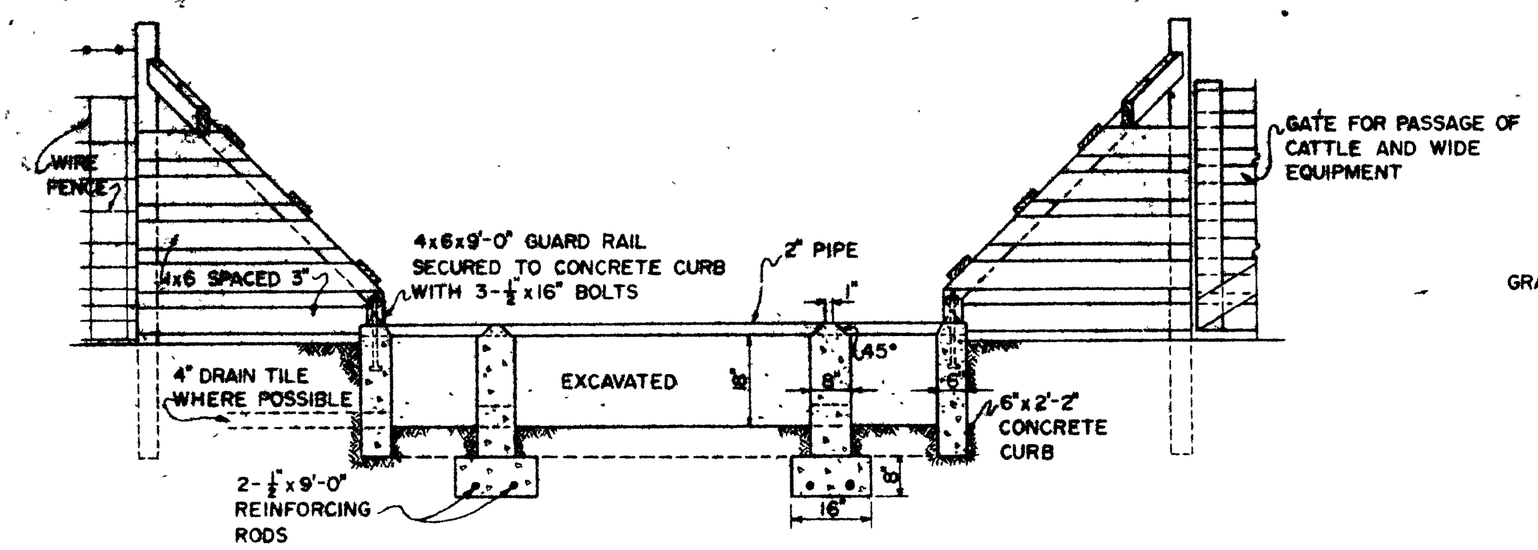

SECTION A-A

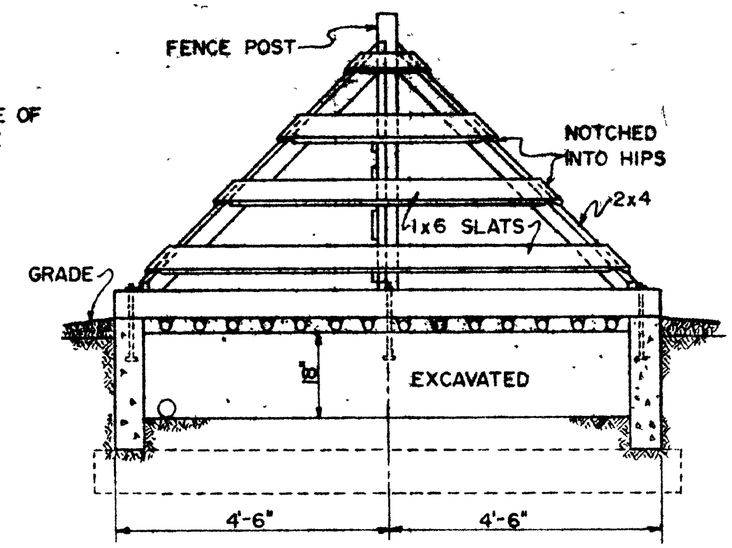

SECTION B-B

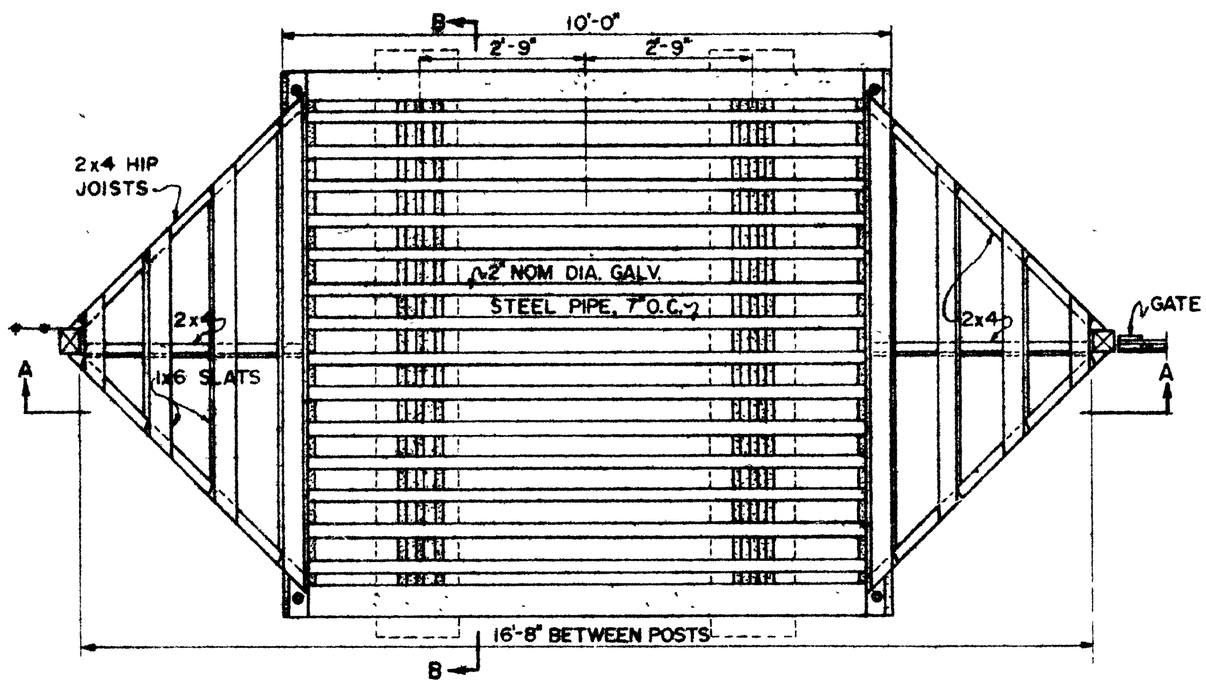

PLAN

BILL OF MATERIALS
CONCRETE AND STEEL

LUMBER		
FRAMING:	1-PCS	2x4x12'-0"
	2- "	2x4x14'-0"
SLATS:	6- "	1x6x12'-0"
GUARD RAILS	2- "	4x6x9'-0"
CONCRETE:	2¾ CU. YDS (1 3·5 MIXTURE)	
CEMENT:	13 SACKS	
SAND	1 4 CU. YDS	
AGGREGATE	2.35 CU. YDS	
MISCELLANEOUS		
PIPES:	14-PCS, 2" NOM. DIA. EXTRA STRONG GALV. STEEL PIPE OR RAILS 10'-0" LONG	
ANCHOR BOLTS:	6-½"ϕ x16"	
REINF RODS:	4-½"ϕ x9'-0"	

NOTE A WIDE GATE ADJACENT TO GUARD IS SUGGESTED FOR PASSAGE OF EXTRA WIDE EQUIPMENT AND LIVESTOCK

ALL WOOD TO BE TREATED WITH PRESERVATIVE.

SCALE: ½" = 1'-0"

COOPERATIVE EXTENSION WORK IN AGRICULTURE AND HOME ECONOMICS

CATTLE GUARDS

USDA '58 | EX 605 | SHEET 1 OF 2