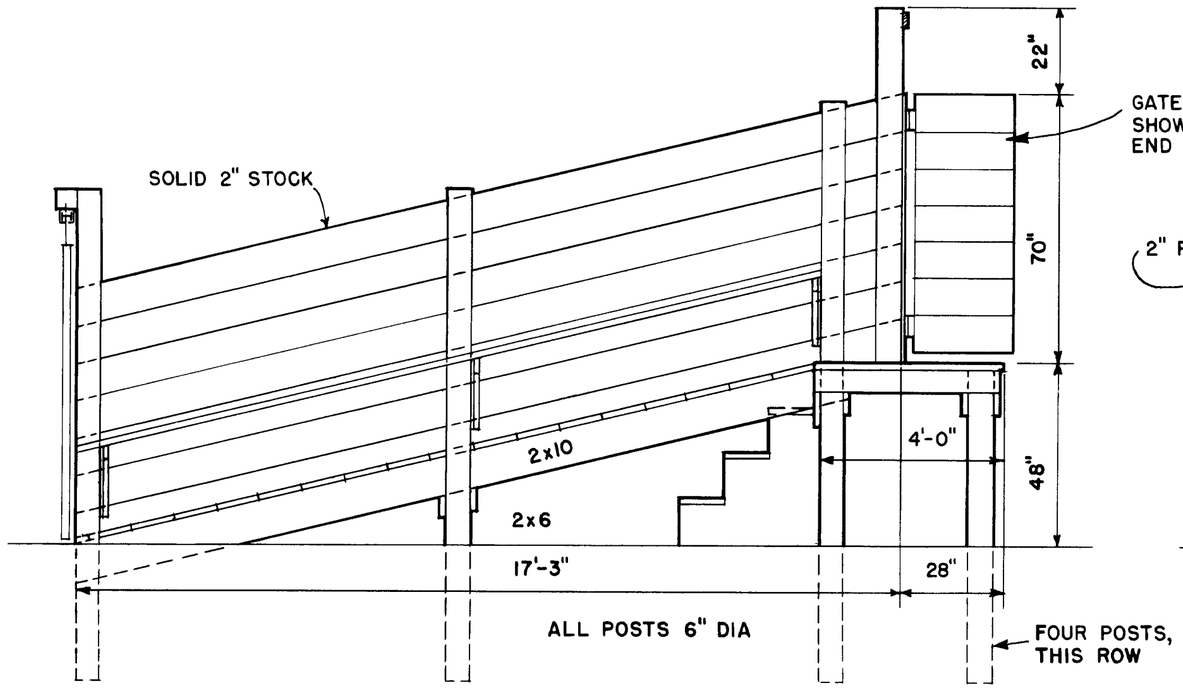

SIDE VIEW

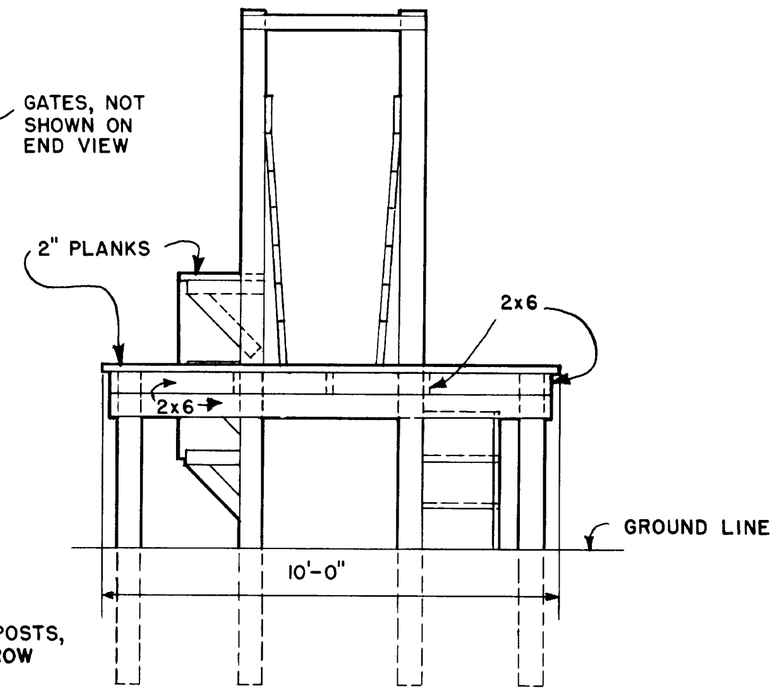

END VIEW

LOADING CHUTE

SCALE 3/8" = 1'-0"

INSTALL CLEATS ON MAN AND ANIMAL RAMPS

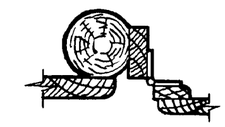

PLAN AT HINGE

AVOID PROJECTING BOLTS USE TREATED POSTS

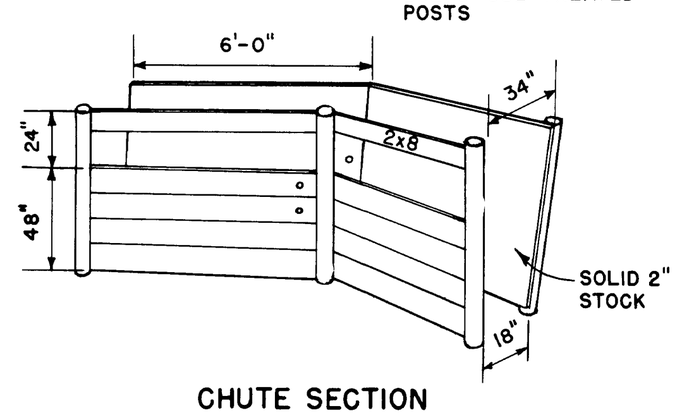

CHUTE SECTION

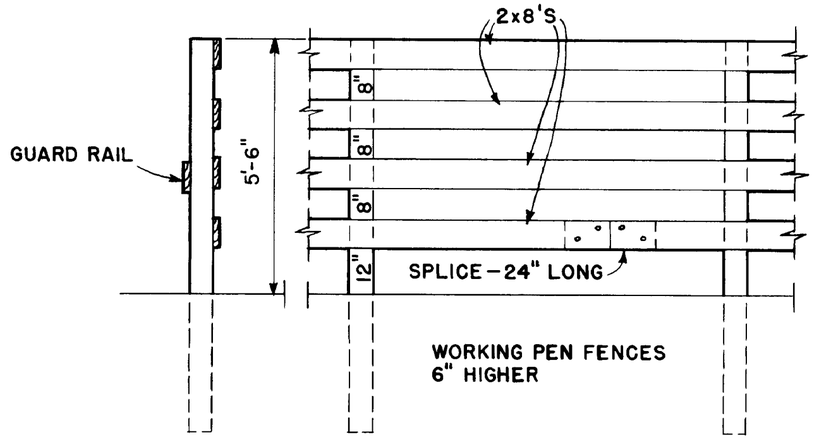

WORKING PEN FENCES 6" HIGHER

FENCE

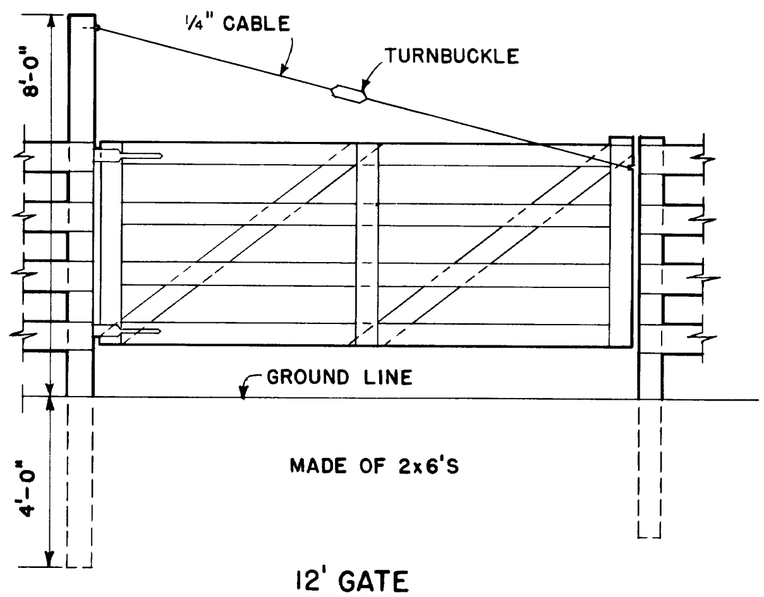

MADE OF 2x6'S

12' GATE

SCALE 3/8" = 1'-0"

COOPERATIVE EXTENSION WORK IN
AGRICULTURE AND HOME ECONOMICS
DEPARTMENT OF AGRICULTURAL ENGINEERING
COLLEGE OF AGRICULTURE
UNIVERSITY OF KENTUCKY
AND
UNITED STATES DEPARTMENT OF AGRICULTURE COOPERATING

CORRAL
WITH CURVED CHUTE

ARIZ & USDA '68	LX 6049	SHEET 2 OF 2

1972

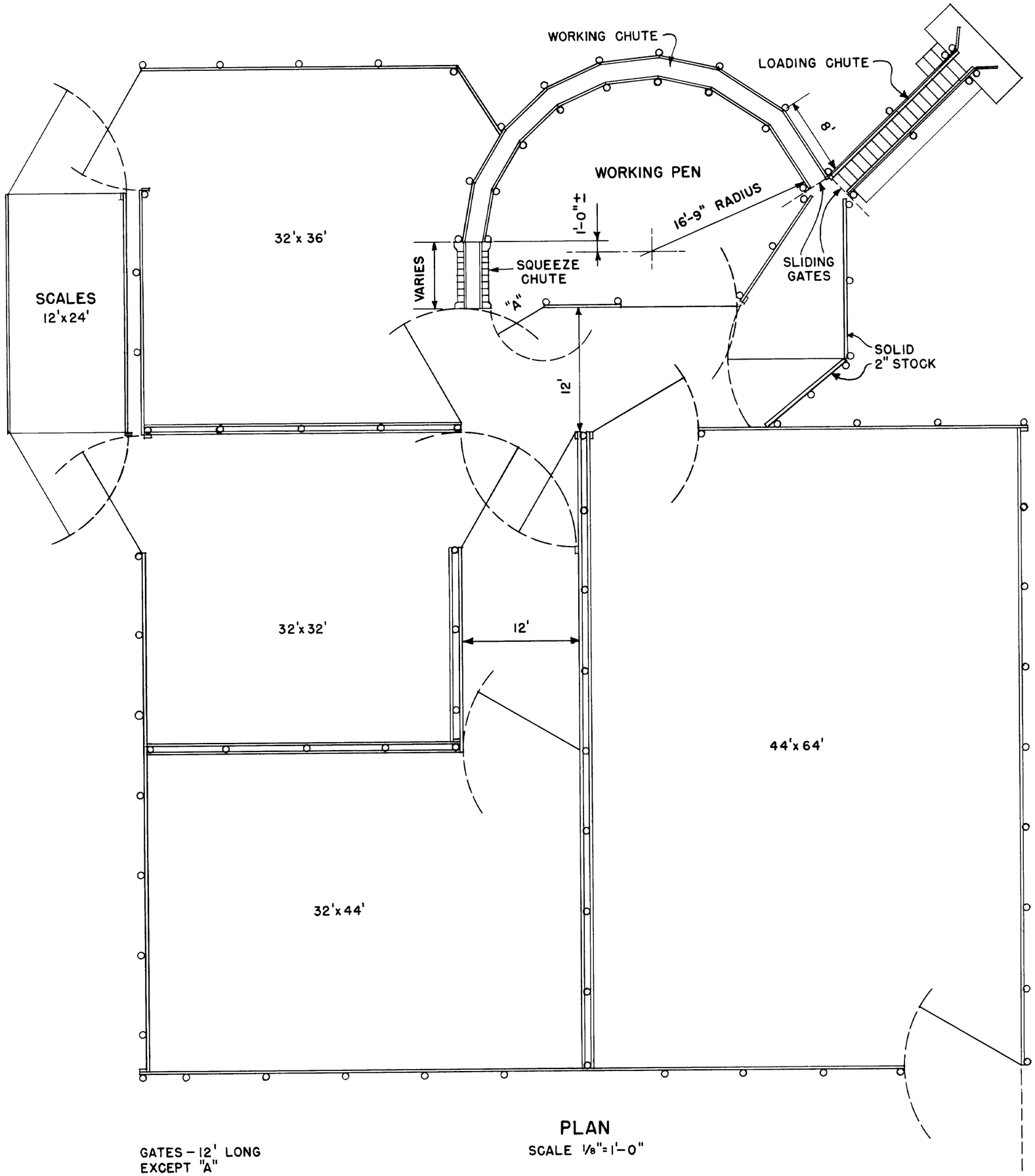

GATES – 12' LONG
EXCEPT "A"

PLAN
SCALE 1/8"=1'-0"

DESIGNED BY AL LANE

ARIZ PLAN A136

COOPERATIVE EXTENSION WORK IN
AGRICULTURE AND HOME ECONOMICS
UNIVERSITY OF ARIZONA
AND
UNITED STATES DEPARTMENT OF AGRICULTURE COOPERATING

CORRAL
WITH CURVED CHUTE

ARIZ & USDA '68	EX 6049	SHEET 1 OF 2

1972