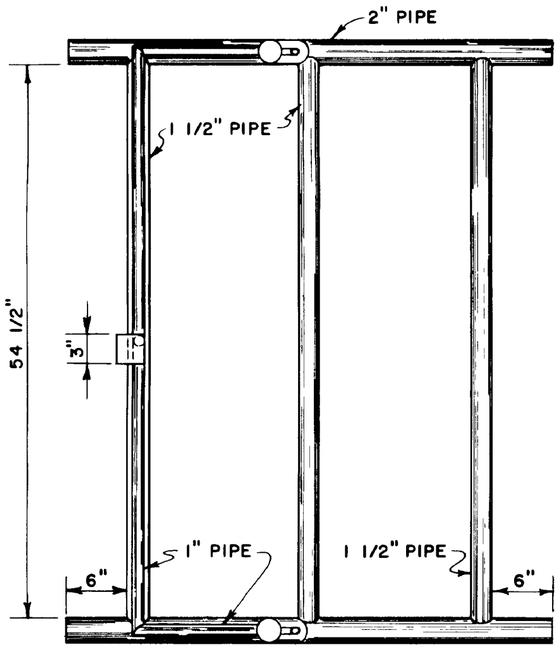

PLAN OF BASE FRAME

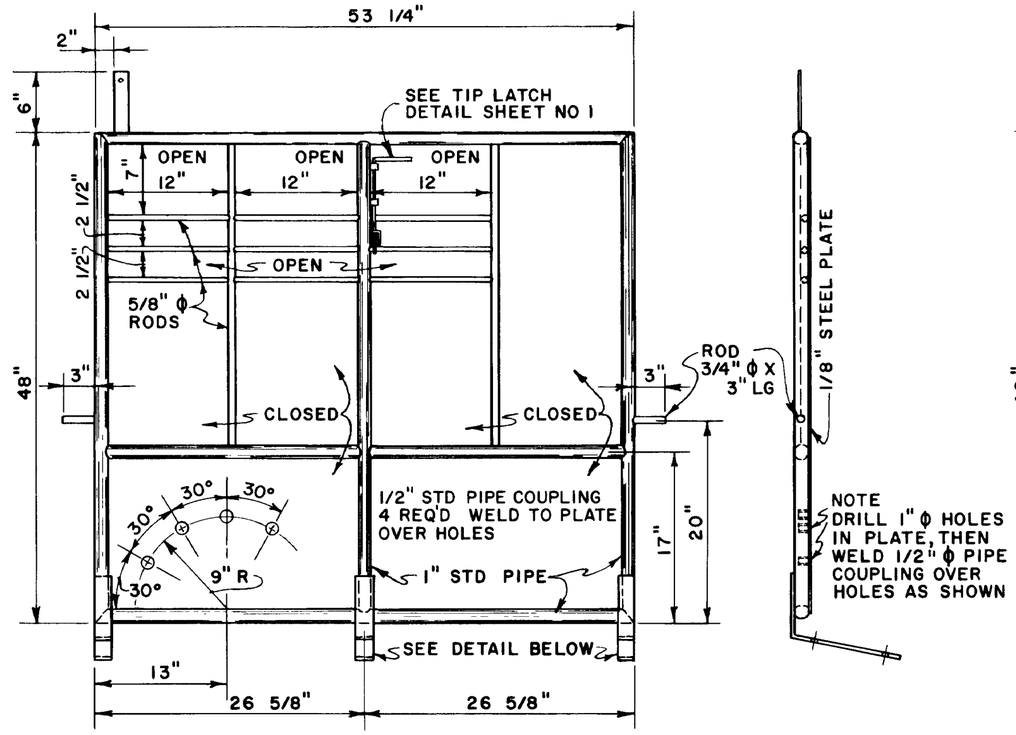

TIP GATE

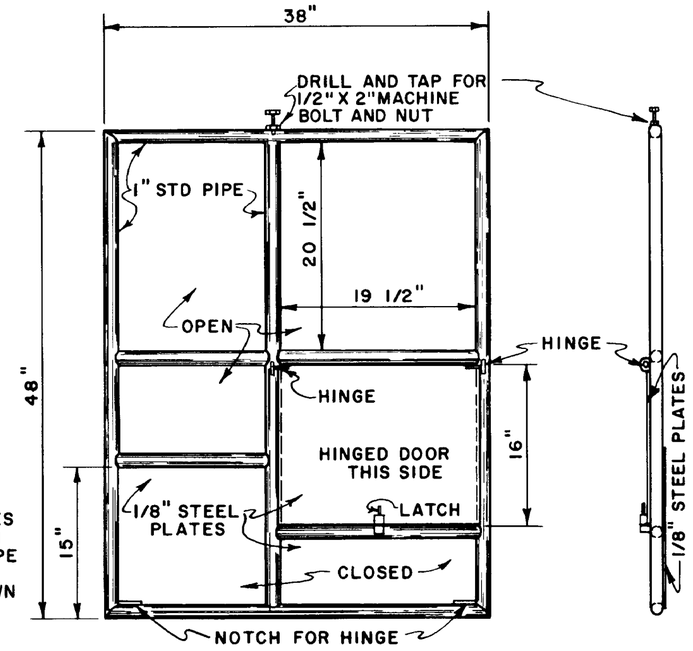

SQUEEZE GATE

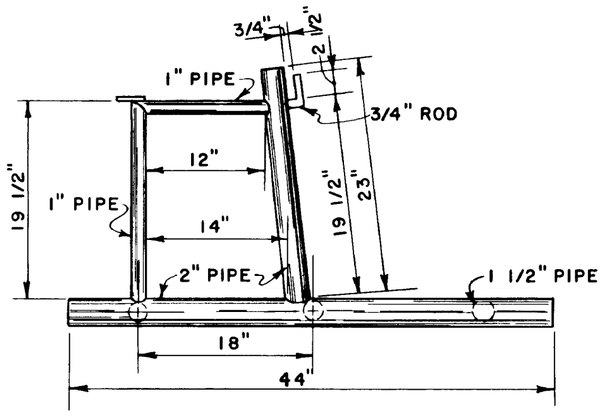

ELEVATION OF BASE FRAME

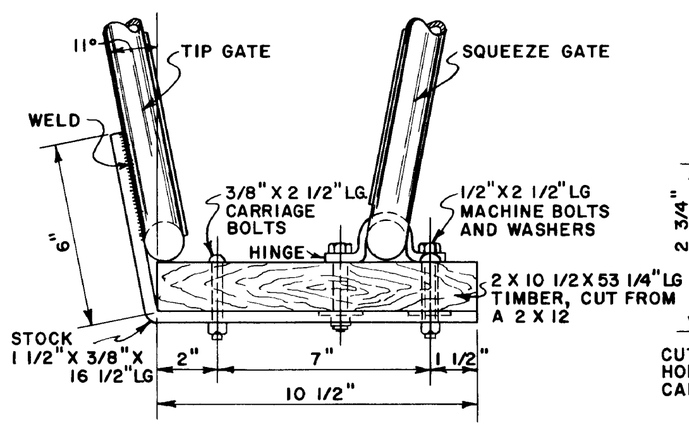

ASSEMBLY DETAIL

SCALE 3" = 1'-0"

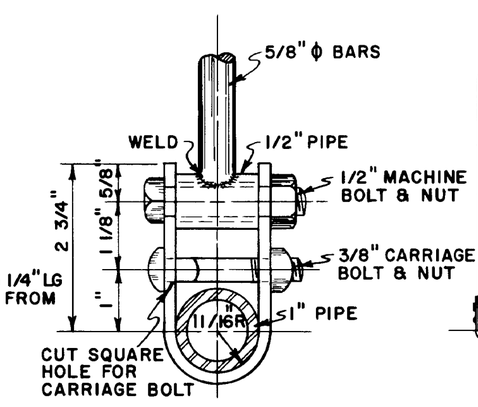

CLAMP DETAIL

(THREE REQUIRED)
SCALE HALF SIZE

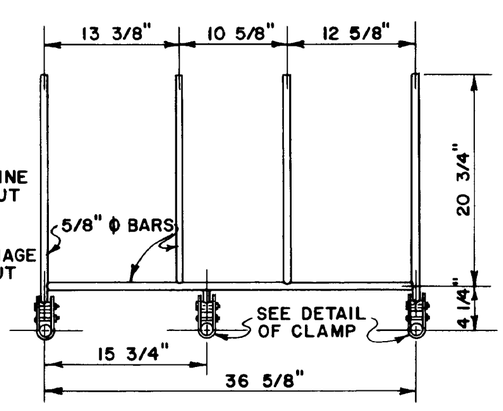

COVER BARS

(ONE REQUIRED)

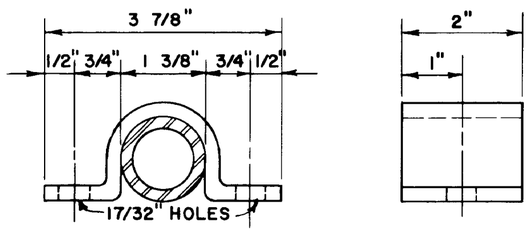

SQUEEZE GATE HINGE

(TWO REQUIRED) STOCK 2" X 1/4" X 6"
SCALE HALF SIZE

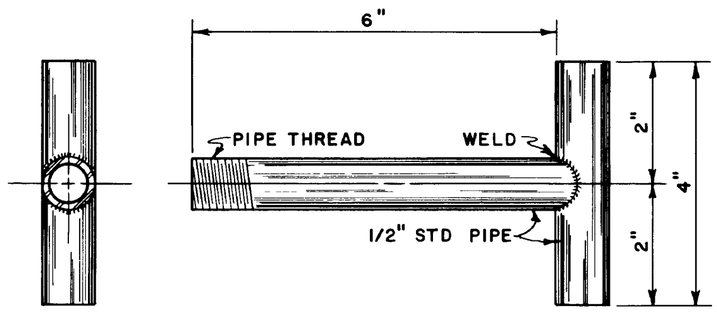

LEG HOLDER

(TWO REQUIRED)
SCALE HALF SIZE

SCALE 1" = 1'-0" EXCEPT AS OTHERWISE NOTED

BASED ON OREGON PLAN 64

COOPERATIVE EXTENSION WORK IN
AGRICULTURE AND HOME ECONOMICS
DEPARTMENT OF AGRICULTURAL ENGINEERING
COLLEGE OF AGRICULTURE
UNIVERSITY OF KENTUCKY
AND
UNITED STATES DEPARTMENT OF AGRICULTURE COOPERATING

TILTING CALF TABLE
PIPE FRAME

USDA '64	EX 5969	SHEET 2 OF 2

REVIEWED

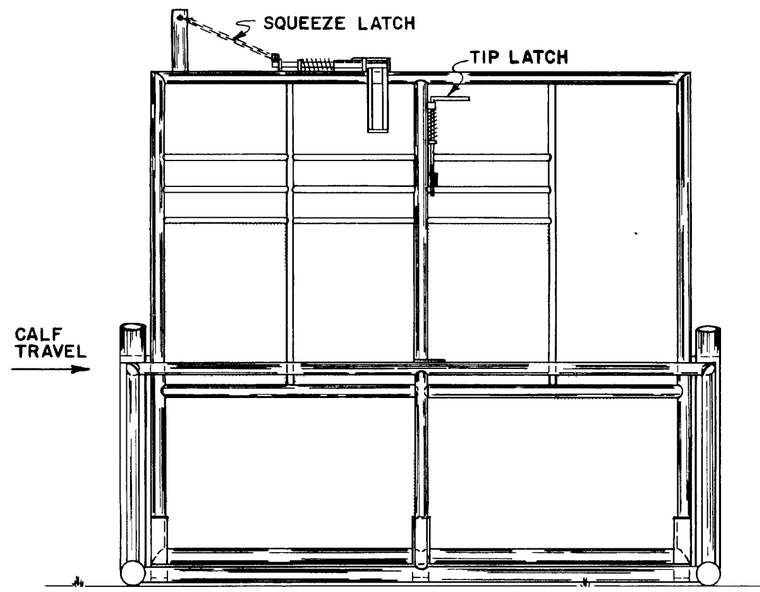

LEFT SIDE VIEW

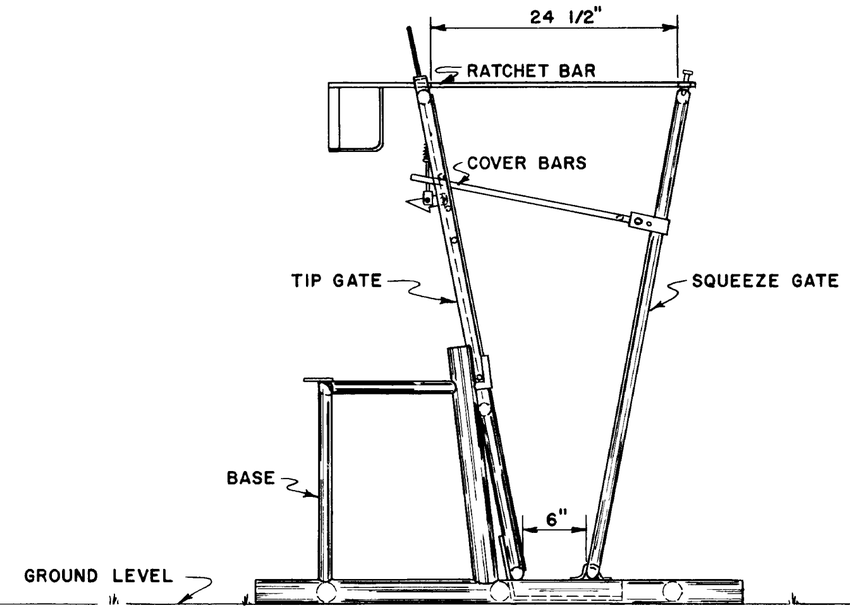

FRONT END VIEW

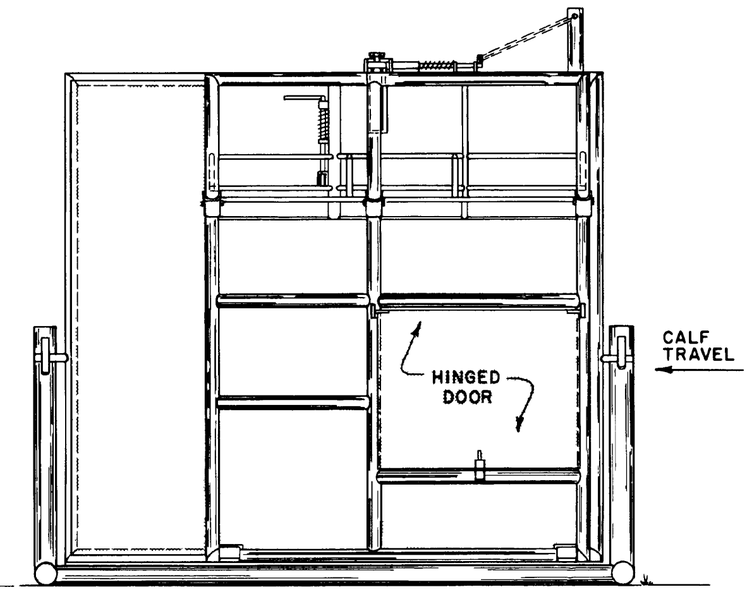

RIGHT SIDE VIEW

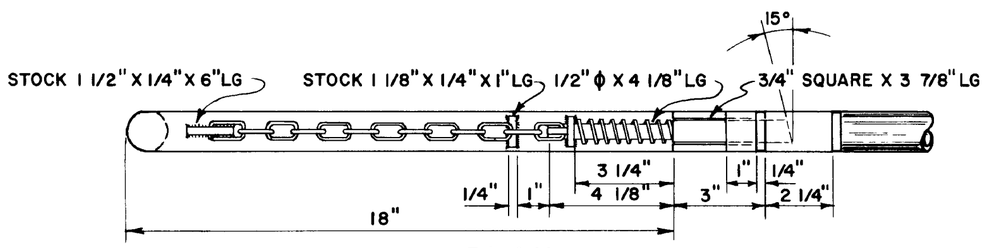

PLAN

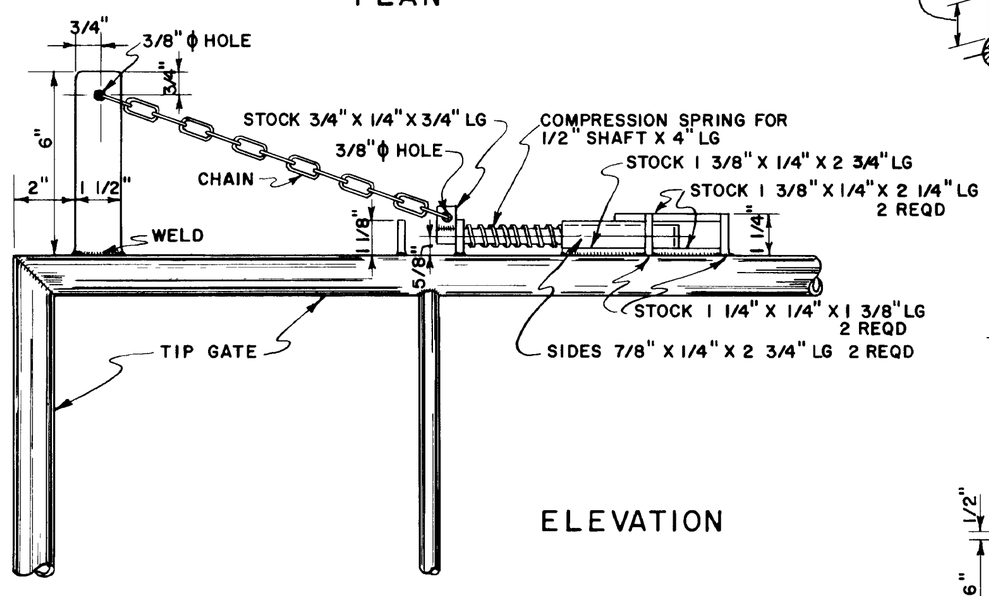

ELEVATION

DETAILS OF SQUEEZE LATCH
(ONE REQUIRED)
SCALE 3" = 1'-0"

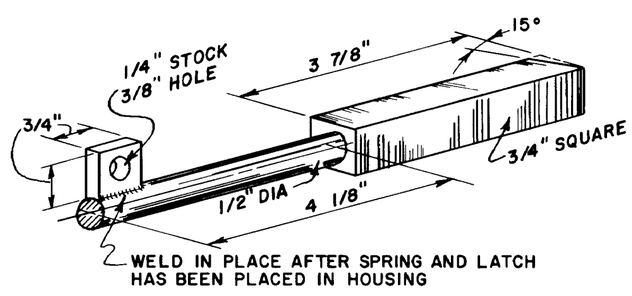

LATCH DETAIL
SCALE HALF SIZE

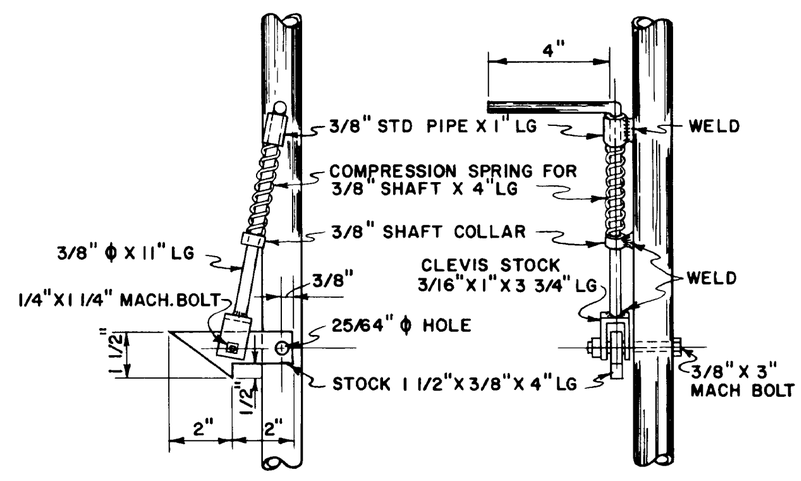

DETAIL OF TIP LATCH
(ONE REQUIRED)
SCALE 3" = 1'-0"

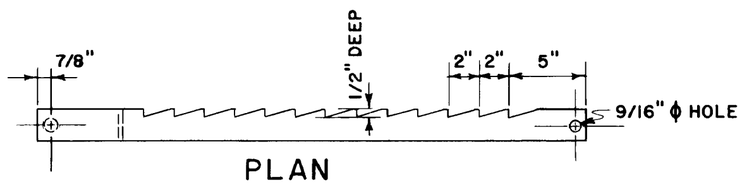

PLAN

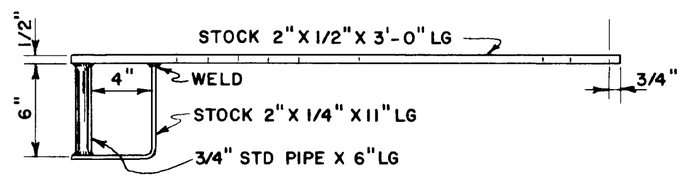

ELEVATION
DETAIL OF RATCHET BAR
(ONE REQUIRED)
SCALE 1 1/2" = 1'-0"

BASED ON OREGON PLAN 64

SCALE: 1" = 1'-0" EXCEPT AS OTHERWISE NOTED

COOPERATIVE EXTENSION WORK IN
AGRICULTURE AND HOME ECONOMICS
DEPARTMENT OF AGRICULTURAL ENGINEERING
COLLEGE OF AGRICULTURE
UNIVERSITY OF KENTUCKY
AND
UNITED STATES DEPARTMENT OF AGRICULTURE COOPERATING

TILTING CALF TABLE
PIPE FRAME

USDA '64	EX 5969	SHEET 1 OF 2

REVIEWED 1972