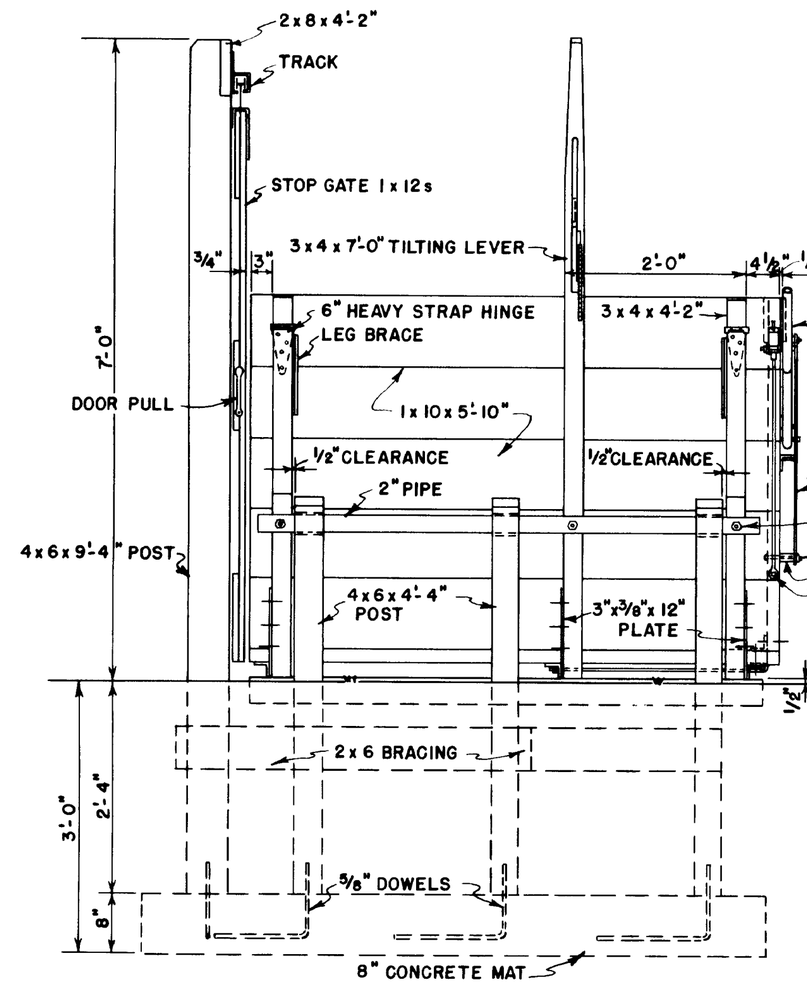

TABLE SIDE

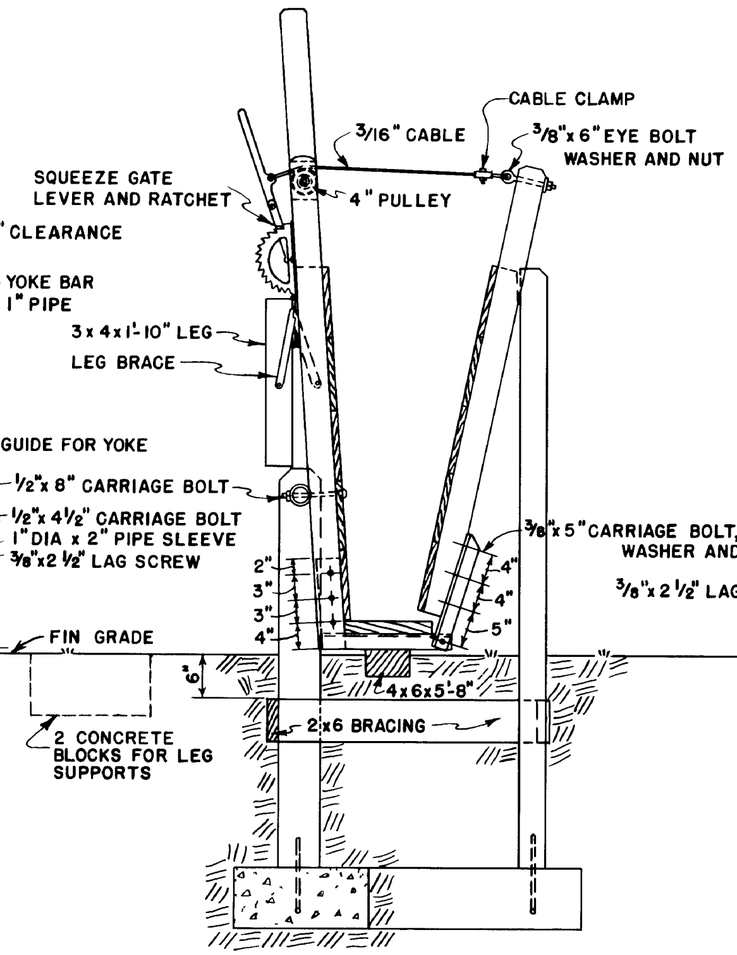

SECTION A-A

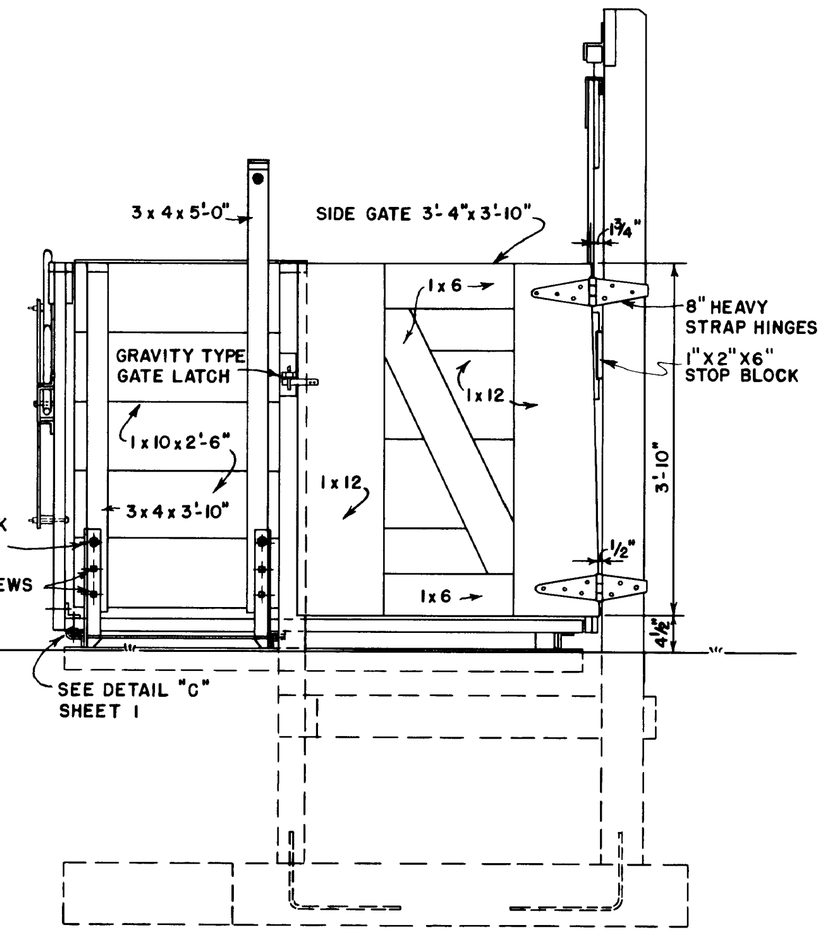

GATE SIDE

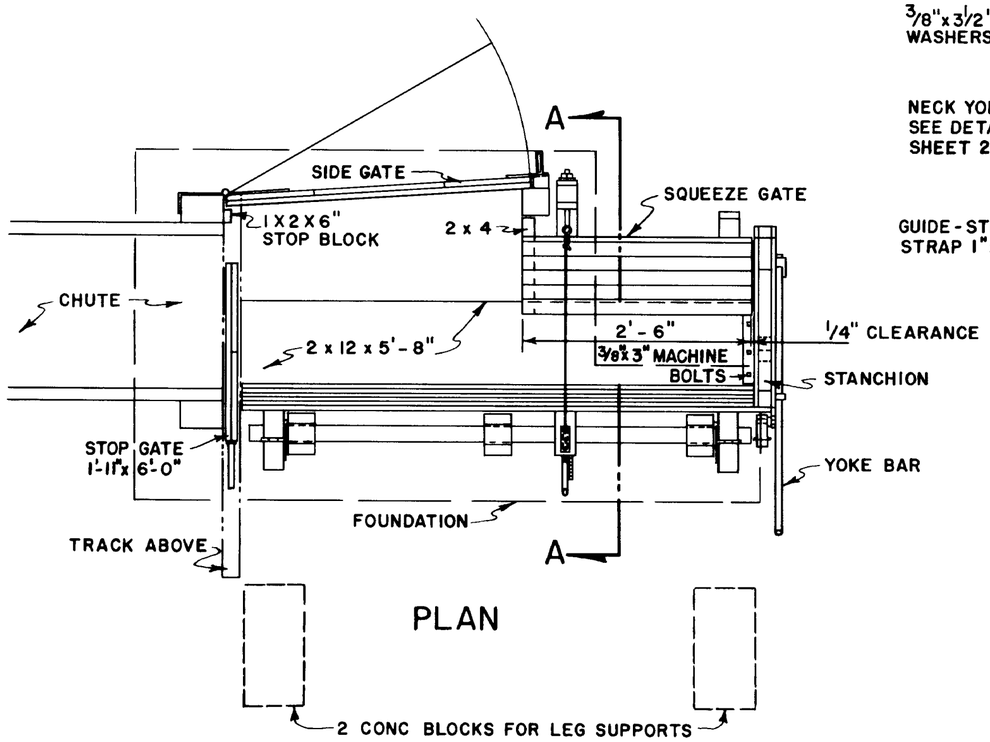

PLAN

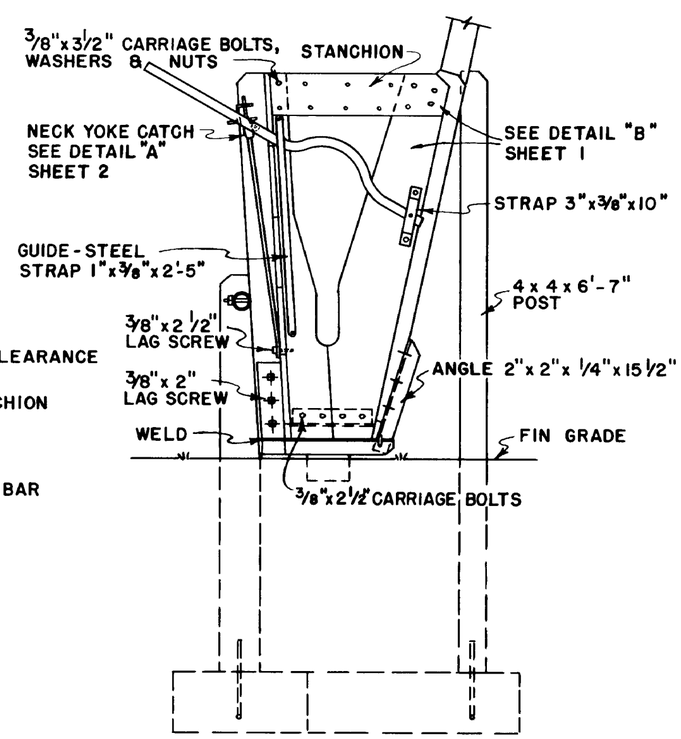

YOKE END

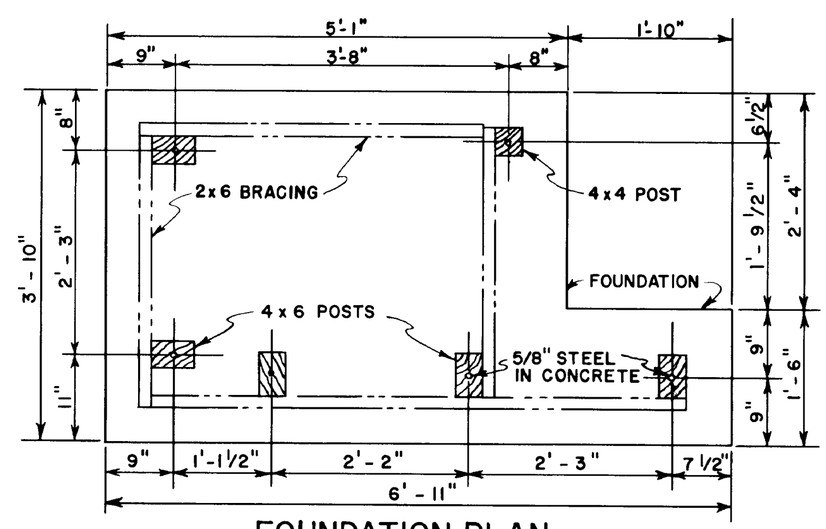

FOUNDATION PLAN

NOTE SCALE 3/4" = 1'-0"
THRU-OUT UNLESS OTHERWISE NOTED

ALL WOOD IN CONTACT WITH THE GROUND SHOULD BE PRESSURE - TREATED WITH PRESERVATIVE (AFTER CUTTING) TO 8LBS PER CU FT RETENTION

BASED ON MONT PLAN C-201

COOPERATIVE EXTENSION WORK IN
AGRICULTURE AND HOME ECONOMICS
DEPARTMENT OF AGRICULTURAL ENGINEERING
COLLEGE OF AGRICULTURE
UNIVERSITY OF KENTUCKY
AND
UNITED STATES DEPARTMENT OF AGRICULTURE COOPERATING

TILTING CALF TABLE

USDA '64	EX 5962	SHEET 2 OF 2

REVIEWED 1972

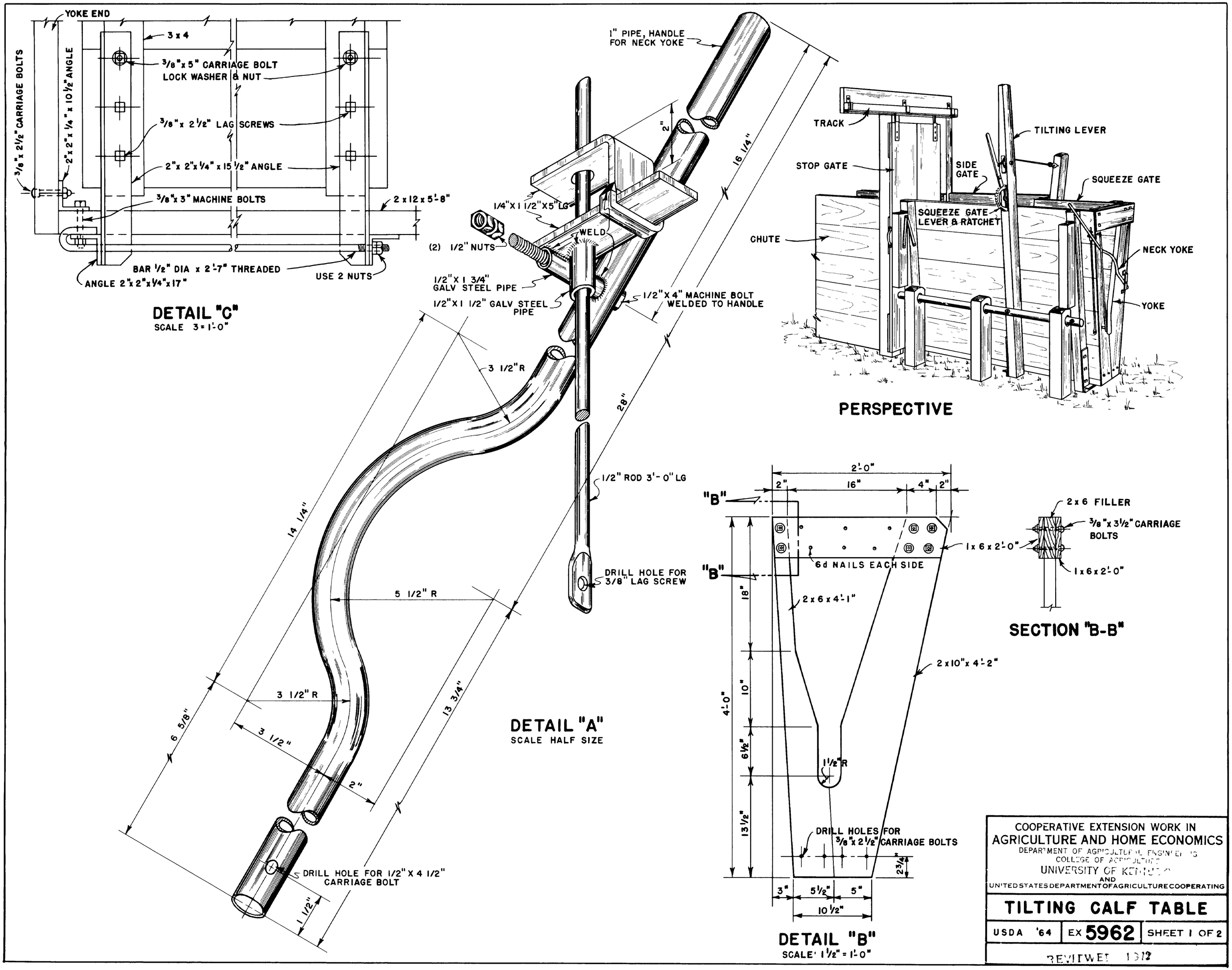
YOKE END
3 x 4
3/8"x 5" CARRIAGE BOLT
LOCK WASHER & NUT
3/8"x 2 1/2" LAG SCREWS
2"x 2"x 1/4" x 15 1/2" ANGLE
3/8"x 3" MACHINE BOLTS
2 x 12 x 5'-8"
3/8"x 2 1/2" CARRIAGE BOLTS
2"x 2"x 1/4" x 10 1/2" ANGLE
BAR 1/2" DIA x 2'-7" THREADED
USE 2 NUTS
ANGLE 2"x 2"x 1/4"x 17"
DETAIL "C"
SCALE 3 = 1'-0"
1" PIPE, HANDLE FOR NECK YOKE
2"
16 1/4"
1/4"X 1 1/2"X5" LG
WELD
(2) 1/2" NUTS
1/2"X 1 3/4" GALV STEEL PIPE
1/2"X 1 1/2" GALV STEEL PIPE
1/2"X 4" MACHINE BOLT WELDED TO HANDLE
3 1/2"R
28"
1/2" ROD 3'- 0" LG
DRILL HOLE FOR 3/8" LAG SCREW
14 1/4"
5 1/2" R
3 1/2" R
3 1/2"
6 5/8"
13 3/4"
2"
DRILL HOLE FOR 1/2" X 4 1/2" CARRIAGE BOLT
1 1/2"
DETAIL "A"
SCALE HALF SIZE
TRACK
TILTING LEVER
STOP GATE
SIDE GATE
SQUEEZE GATE
SQUEEZE GATE LEVER & RATCHET
CHUTE
NECK YOKE
YOKE
PERSPECTIVE
2'-0"
2"
16"
4"
2"
"B"
"B"
1 x 6 x 2'-0"
6d NAILS EACH SIDE
2 x 6 x 4'-1"
2 x 10" x 4'-2"
18"
10"
6 1/2"
13 1/2"
4'-0"
1 1/2"R
DRILL HOLES FOR 3/8" x 2 1/2" CARRIAGE BOLTS
2 3/4"
3"
5 1/2"
5"
10 1/2"
DETAIL "B"
SCALE 1 1/2" = 1'-0"
2 x 6 FILLER
3/8" x 3 1/2" CARRIAGE BOLTS
1 x 6 x 2'-0"
SECTION "B-B"
COOPERATIVE EXTENSION WORK IN
AGRICULTURE AND HOME ECONOMICS
DEPARTMENT OF AGRICULTURAL ENGINEERING
COLLEGE OF AGRICULTURE
UNIVERSITY OF KENTUCKY
AND
UNITED STATES DEPARTMENT OF AGRICULTURE COOPERATING
TILTING CALF TABLE
USDA '64
EX 5962
SHEET 1 OF 2
REVITWET 1972