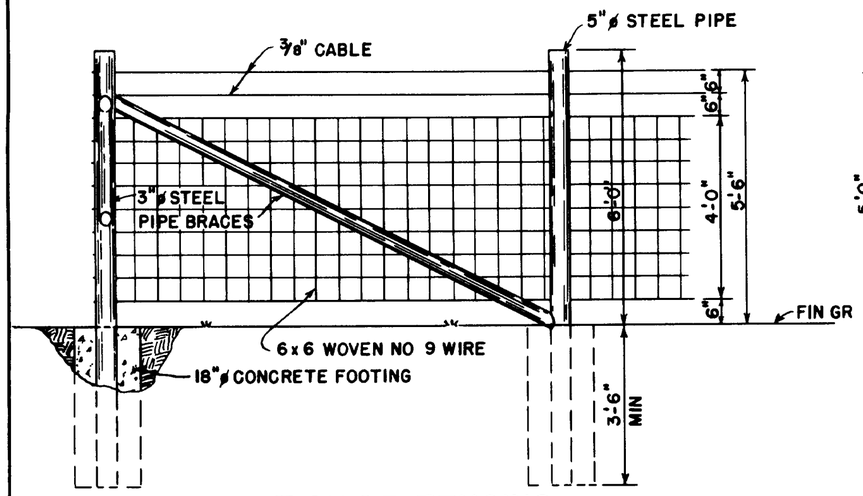

ELEVATION OF FENCING TYPICAL CORNER

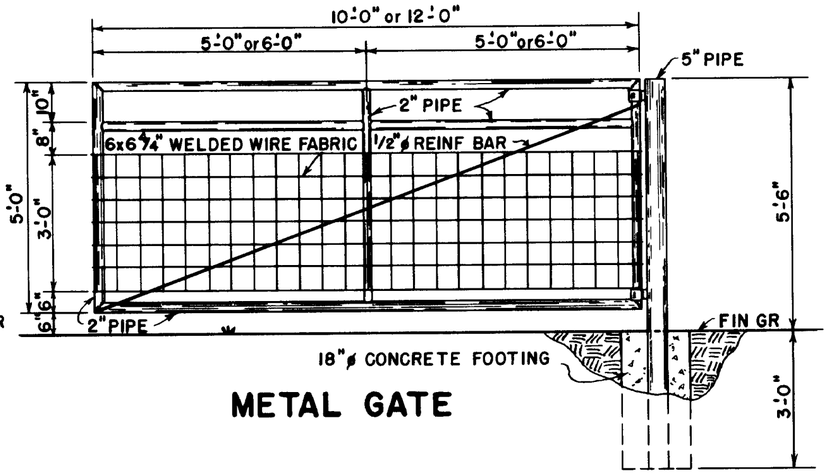

METAL GATE

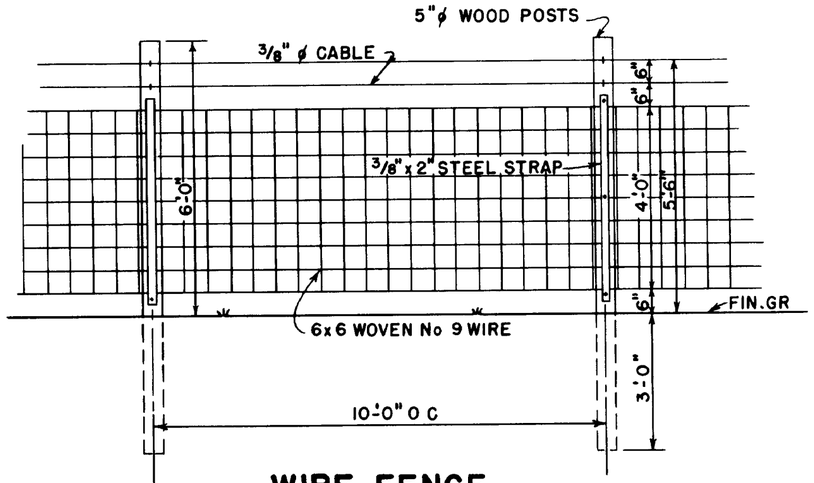

WIRE FENCE

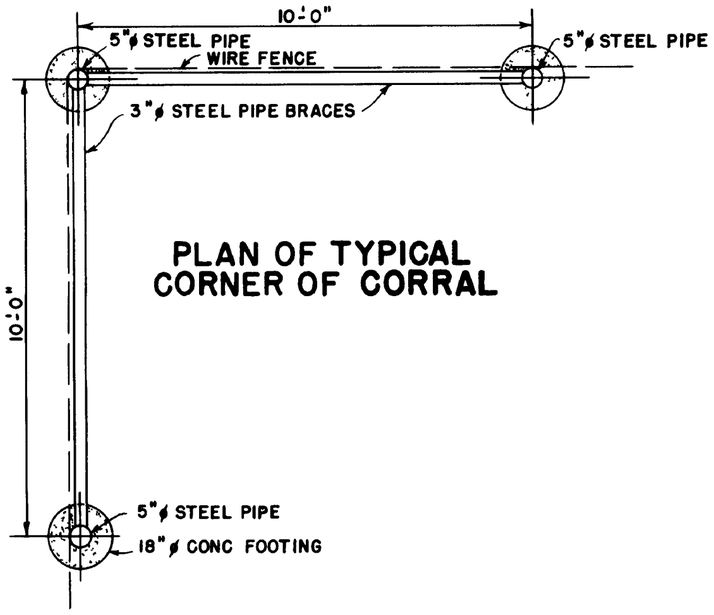

PLAN OF TYPICAL CORNER OF CORRAL

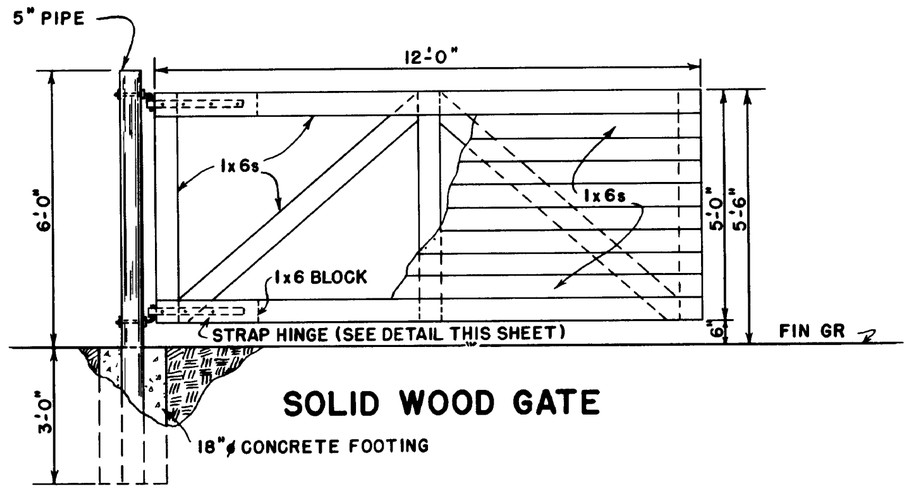

SOLID WOOD GATE

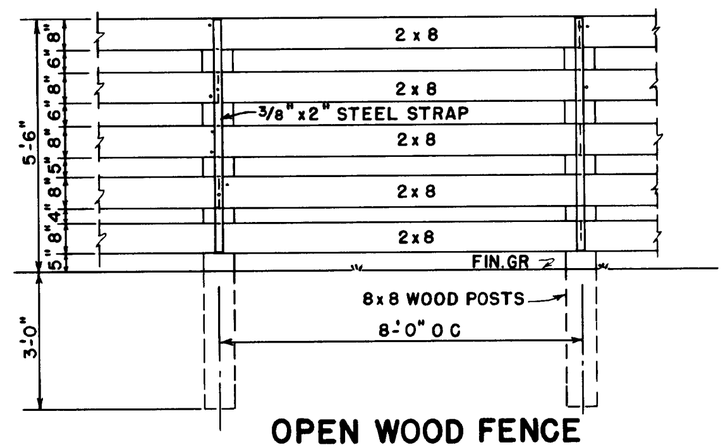

OPEN WOOD FENCE

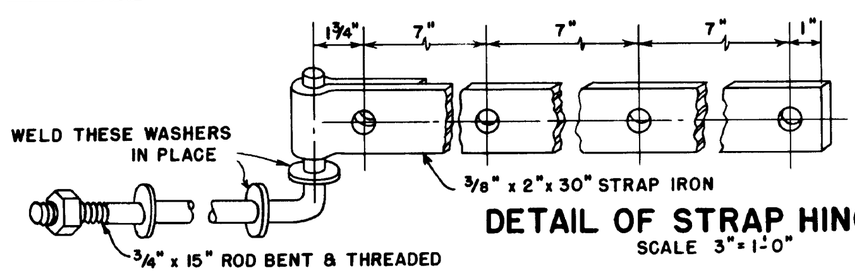

DETAIL OF STRAP HINGE
SCALE 3" = 1'-0"

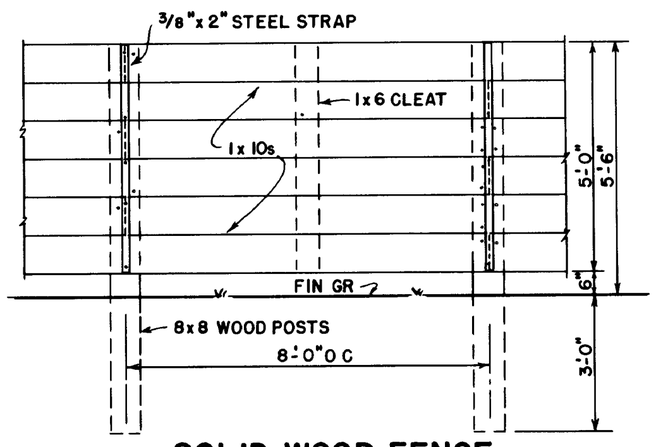

SOLID WOOD FENCE

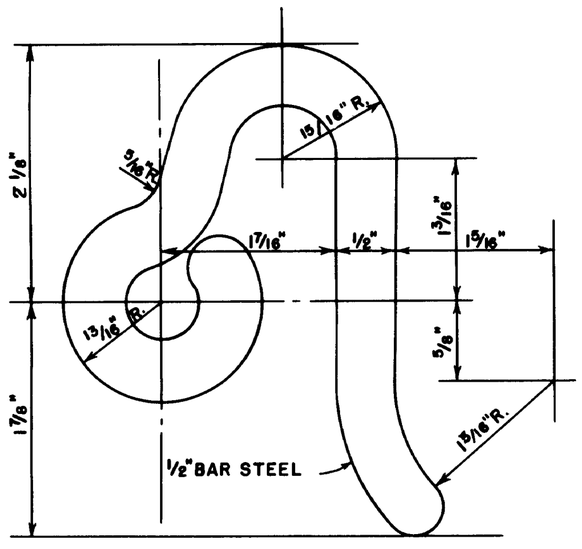

GATE HOOK
SCALE FULL SIZE

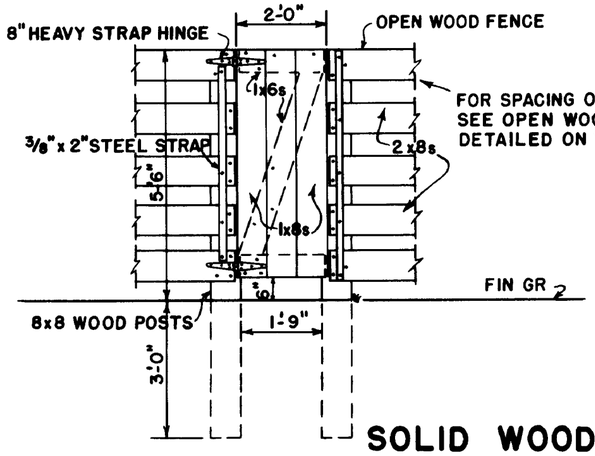

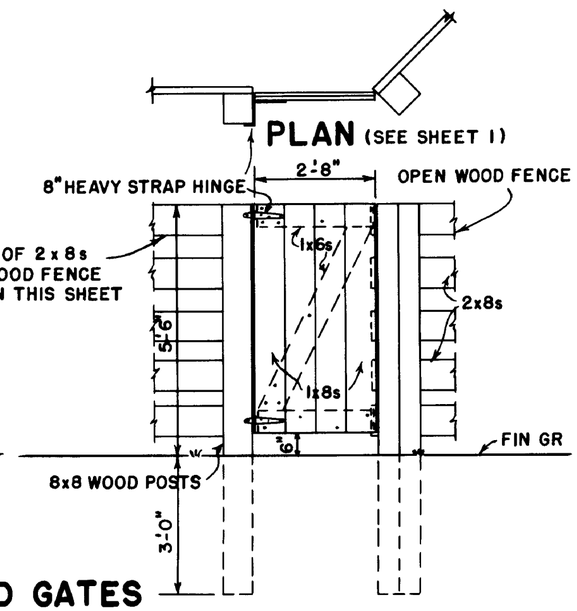

SOLID WOOD GATES

SCALE 3/8" = 1'-0" UNLESS OTHERWISE NOTED

COOPERATIVE EXTENSION WORK IN
AGRICULTURE AND HOME ECONOMICS
DEPARTMENT OF AGRICULTUPAL ENGINEERING
COLLEGE OF AGRICULTURE
UNIVERSITY OF KENTUCKY
AND
UNITED STATES DEPARTMENT OF AGRICULTURE COOPERATING

GATES AND FENCES FOR STOCK CORRALS

USDA '63	EX 5961	SHEET 1 OF 1

REVISED 1972