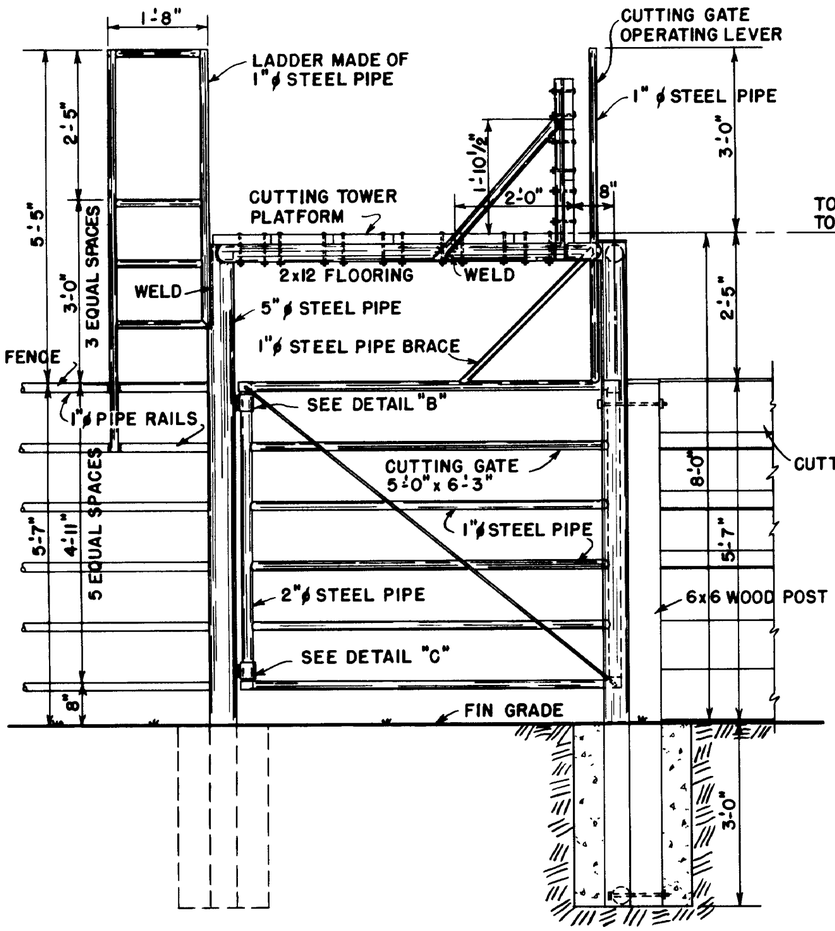

ELEVATION

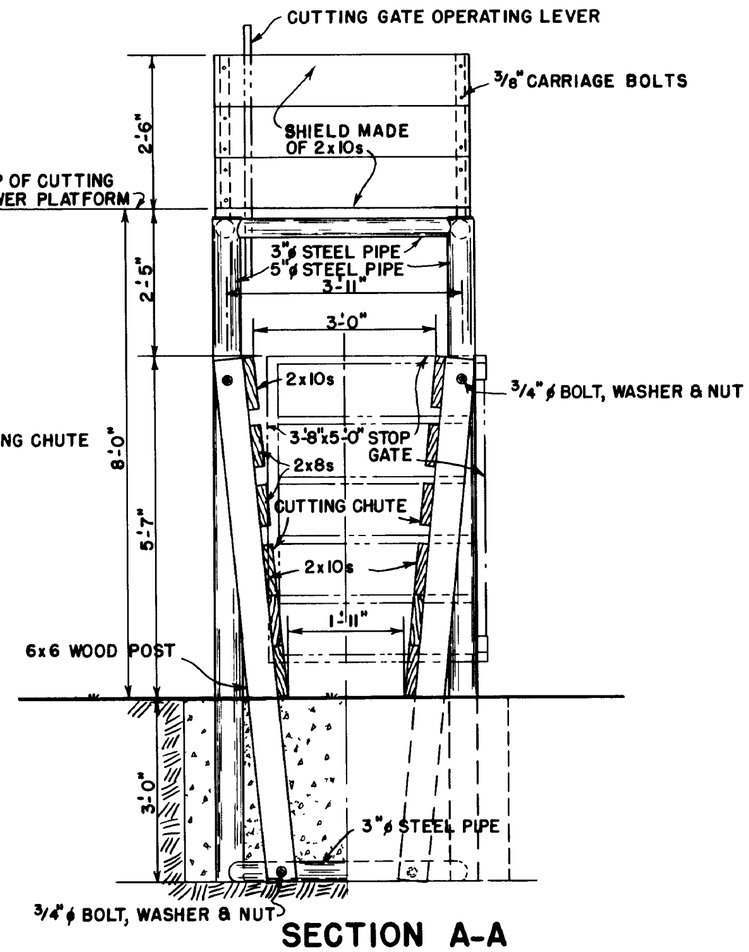

SECTION A-A

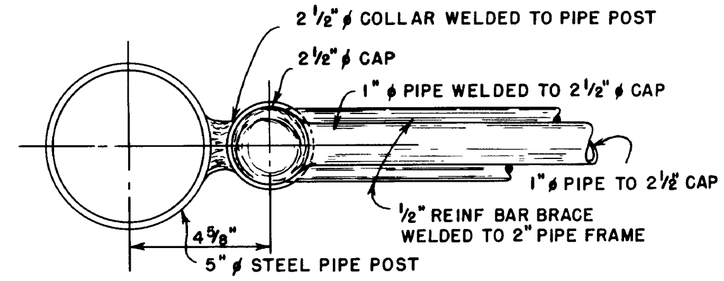

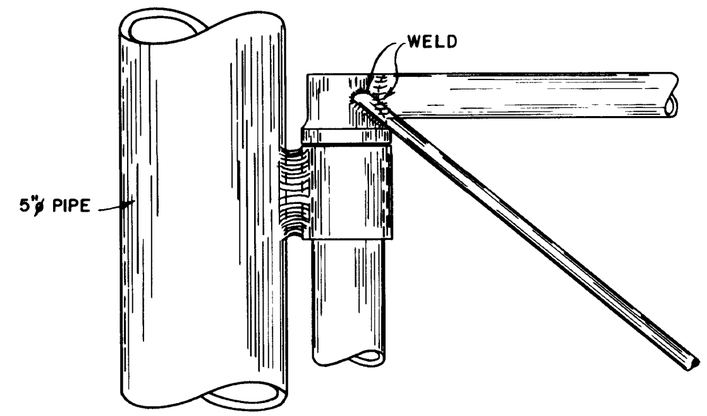

DETAIL "B"
SCALE 3" = 1'-0"

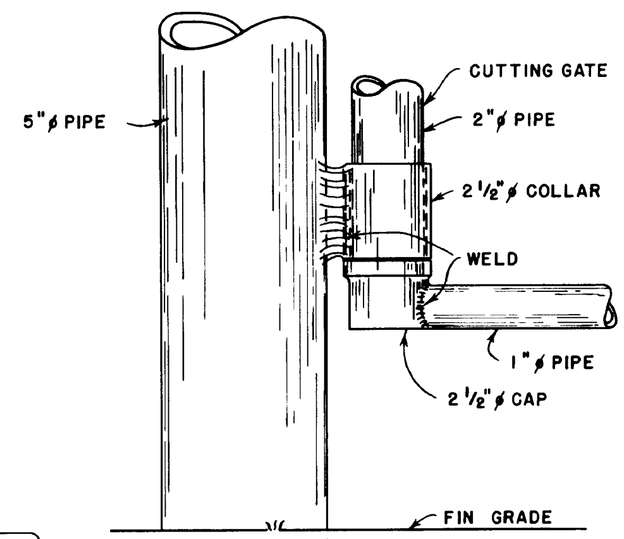

DETAIL "C"
SCALE 3" = 1'-0"

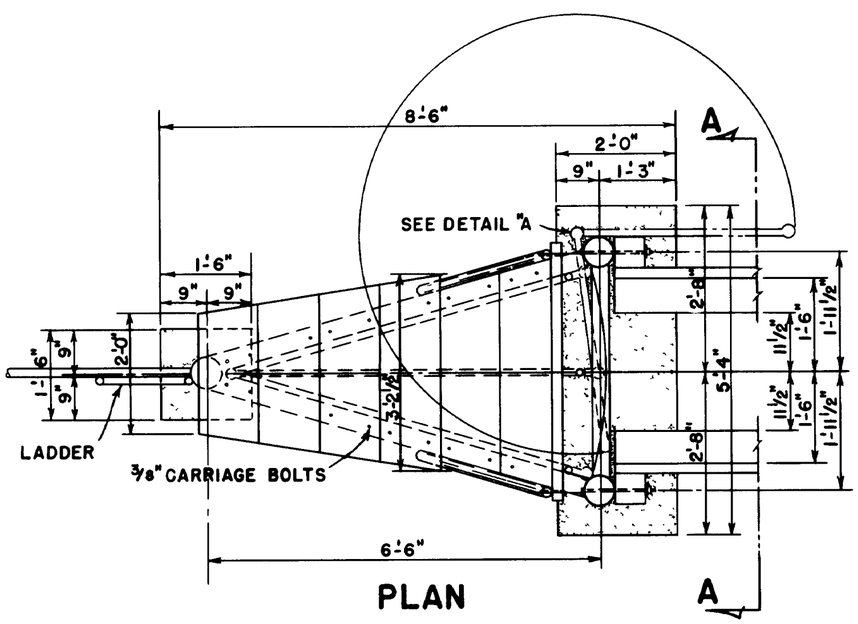

PLAN

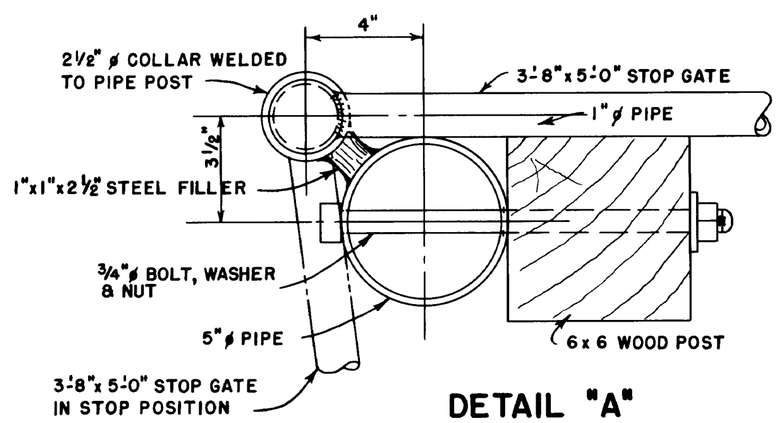

DETAIL "A"
SCALE 3" = 1'-0"

SCALE 1/2" = 1'-0" UNLESS OTHERWISE NOTED

COOPERATIVE EXTENSION WORK IN
AGRICULTURE AND HOME ECONOMICS
DEPARTMENT OF AGRICULTURAL ENGINEERING
COLLEGE OF AGRICULTURE
UNIVERSITY OF KENTUCKY
AND
UNITED STATES DEPARTMENT OF AGRICULTURE COOPERATING

CUTTING GATE, TOWER AND CHUTE

USDA '63	EX 5959	SHEET 1 OF 1

REVISED 1972