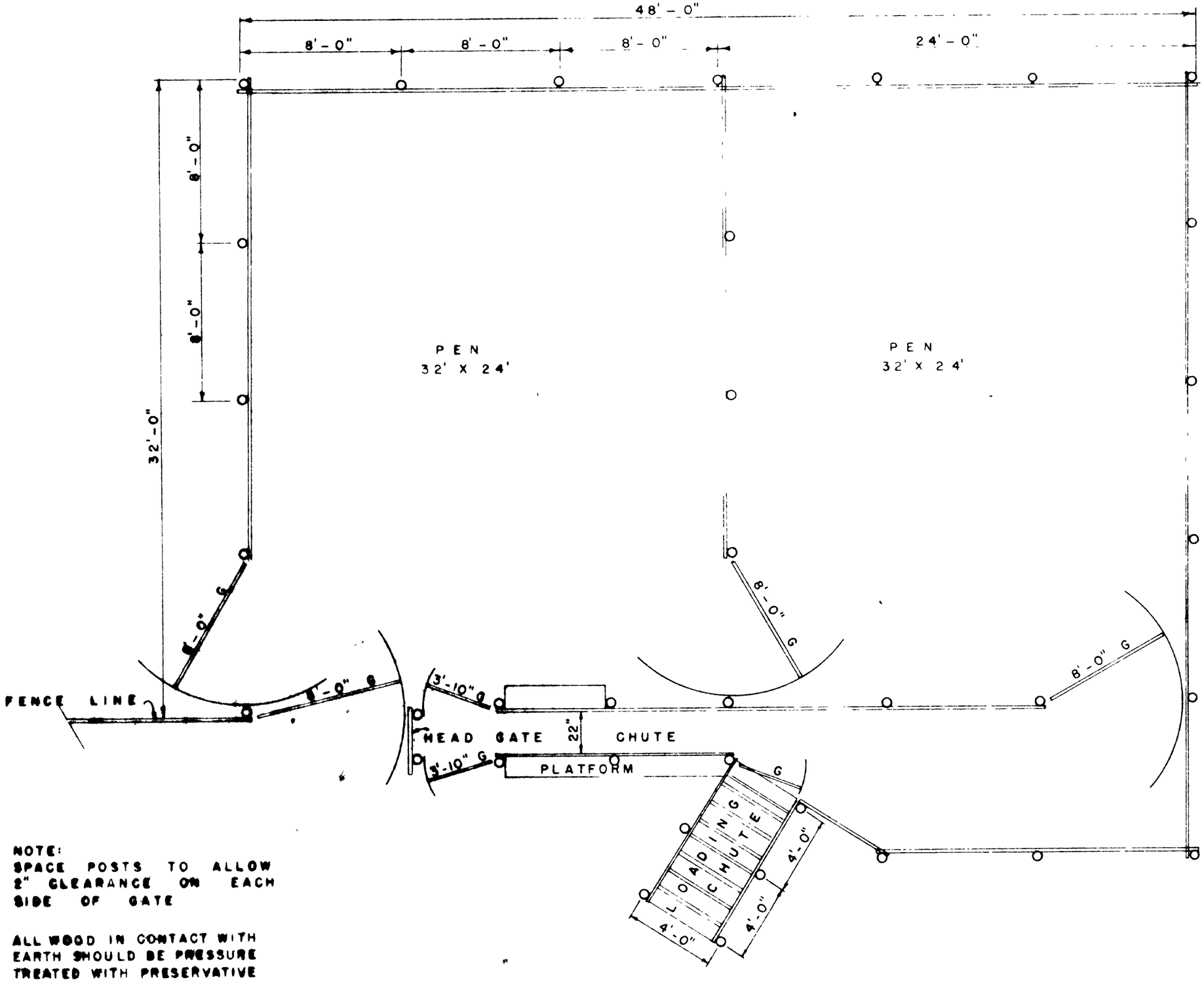

NOTE:
SPACE POSTS TO ALLOW 2" CLEARANCE ON EACH SIDE OF GATE

ALL WOOD IN CONTACT WITH EARTH SHOULD BE PRESSURE TREATED WITH PRESERVATIVE

P L A N

COOPERATIVE EXTENSION WORK IN
AGRICULTURE AND HOME ECONOMICS
College [illegible]
University [illegible]
Div. [illegible]
UNITED STATES DEPARTMENT OF AGRICULTURE COOPERATING

TWO-PEN CORRAL

VA '54 | EX. 5796 | SHEET 1 OF 4

PLAN No.

REVISED

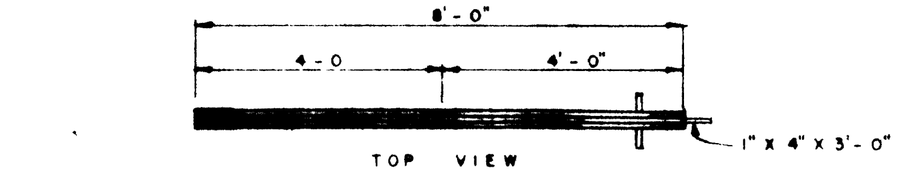

TOP VIEW

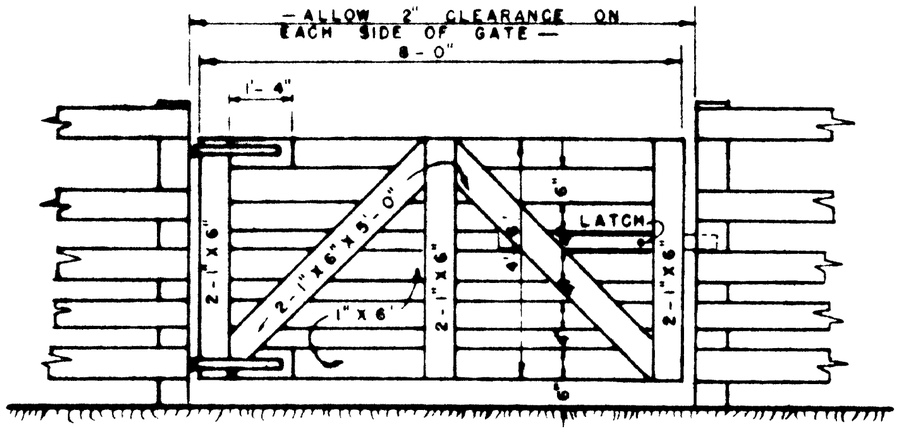

GATE

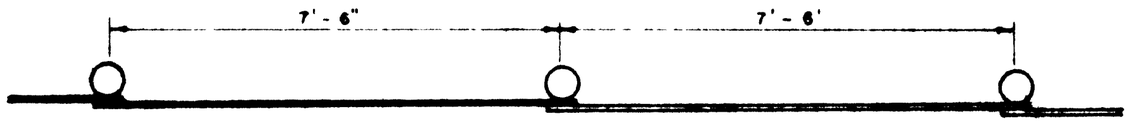

RAILS WITH OVERLAPPING JOINTS

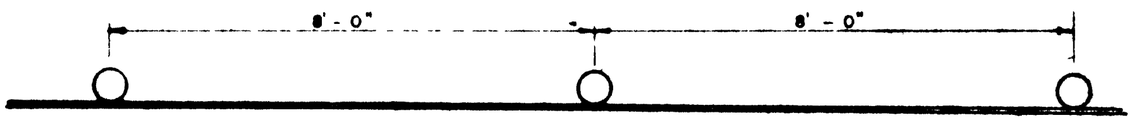

RAILS WITH BUTTED JOINTS

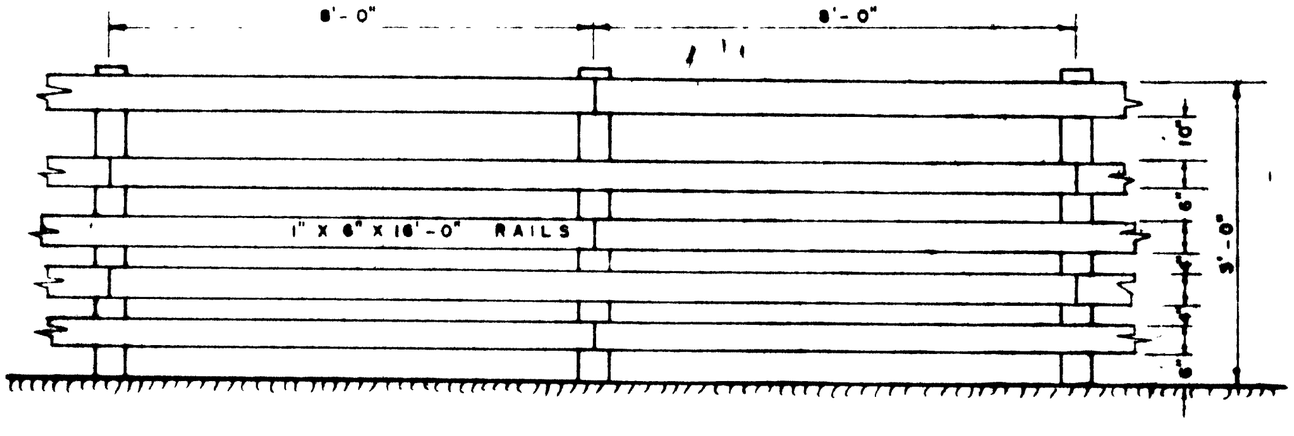

BOARD FENCE

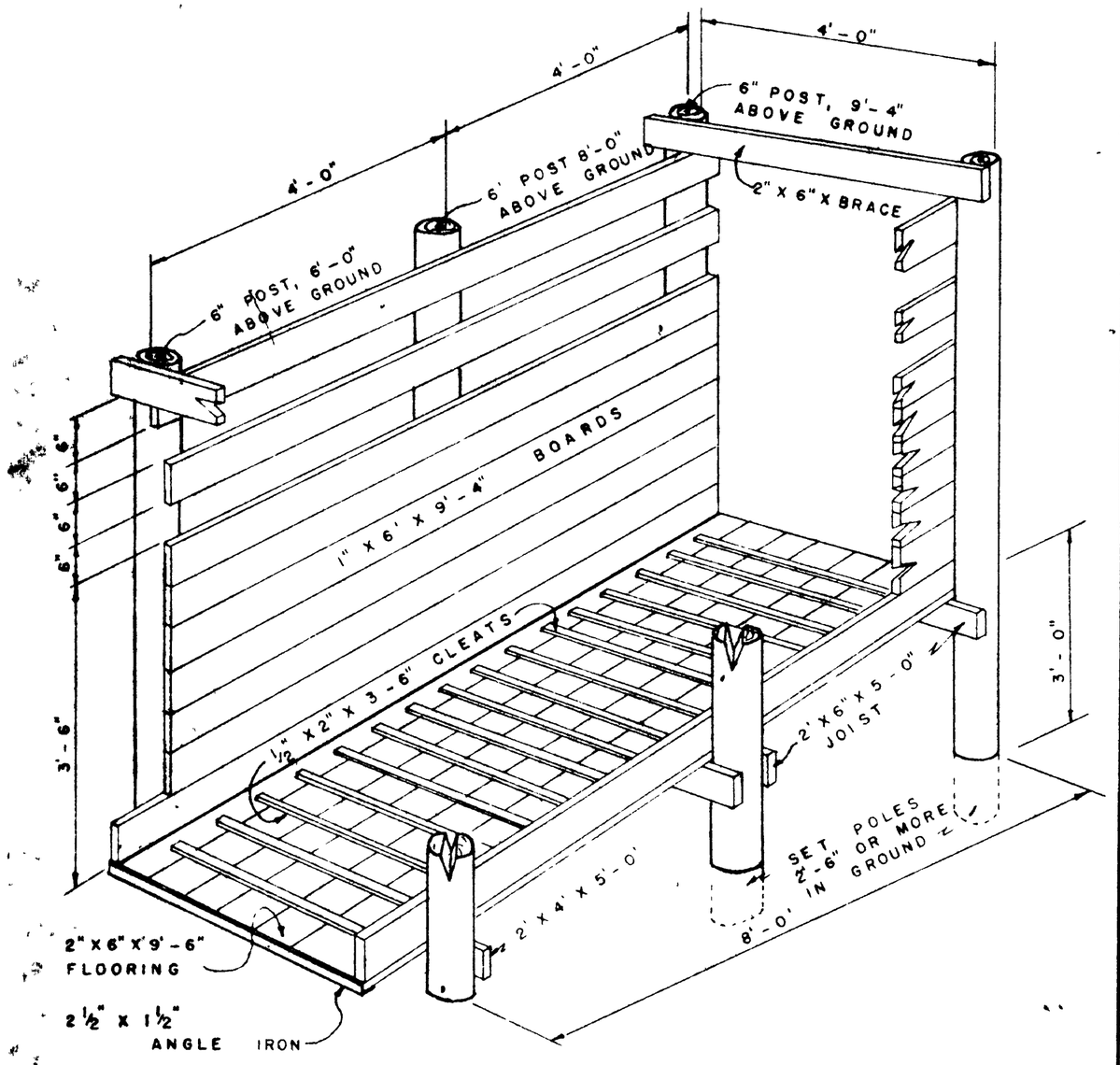

LOADING CHUTE

NOTE
FENCE POSTS SHOULD BE SET ABOUT 3'-0" IN GROUND

COOPERATIVE EXTENSION WORK IN
AGRICULTURE AND HOME ECONOMICS
College of Agric & Home Economics
University of Ky Lexington
Agric Engr Division
AND
UNITED STATES DEPARTMENT OF AGRICULTURE COOPERATING

TWO-PEN CORRAL

VA '54	EX 5796	SHEET 2 OF 4

REVISED 1952

PLAN No

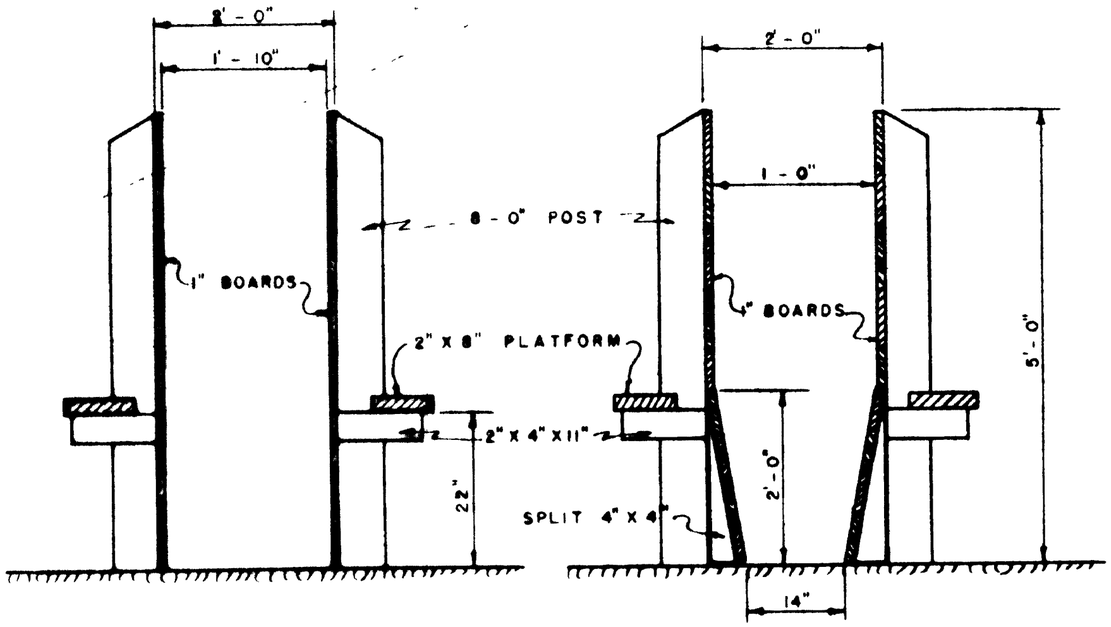

STRAIGHT SIDES SLANTED SIDES

CROSS SECTION OF CHUTE

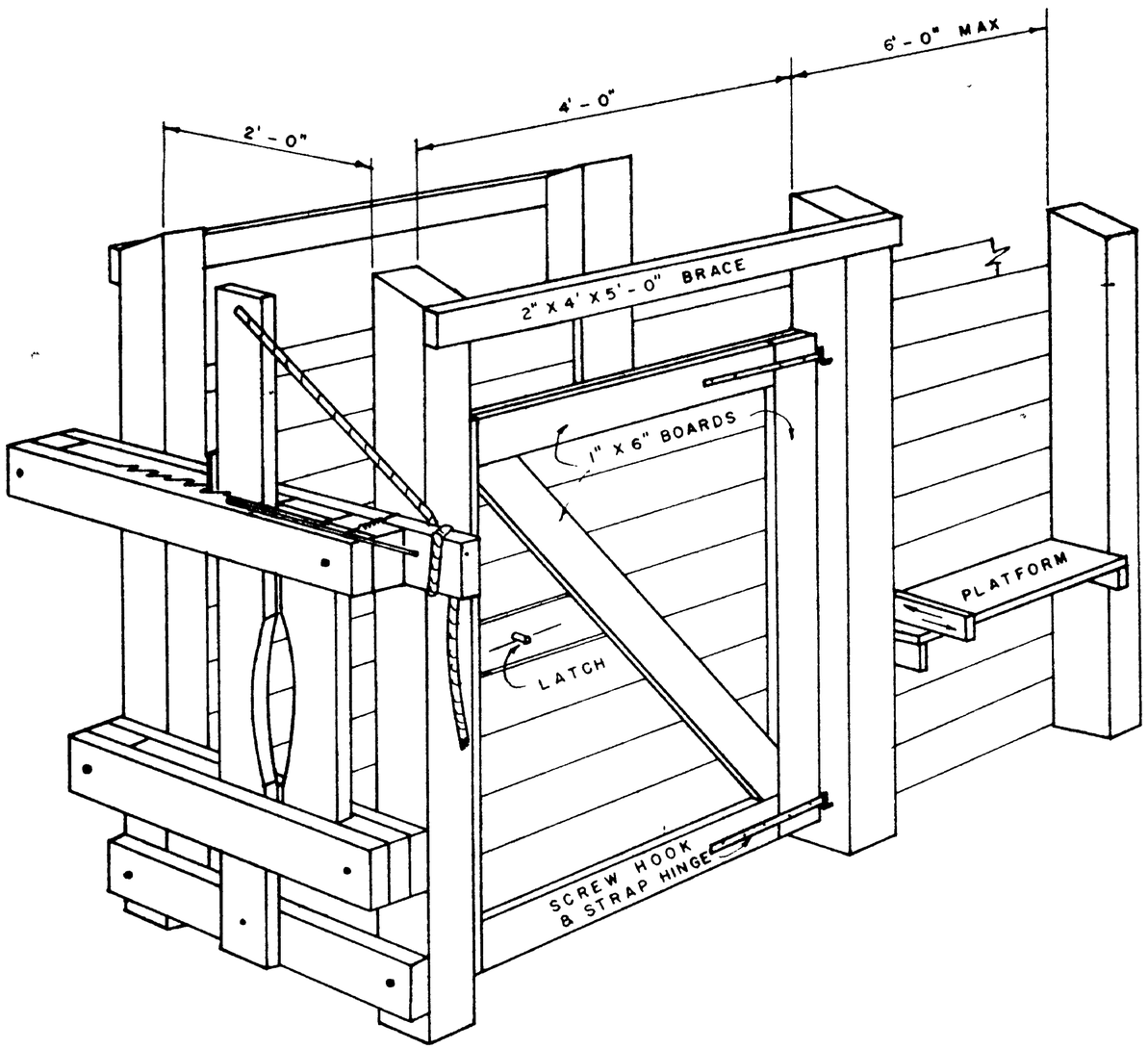

PERSPECTIVE

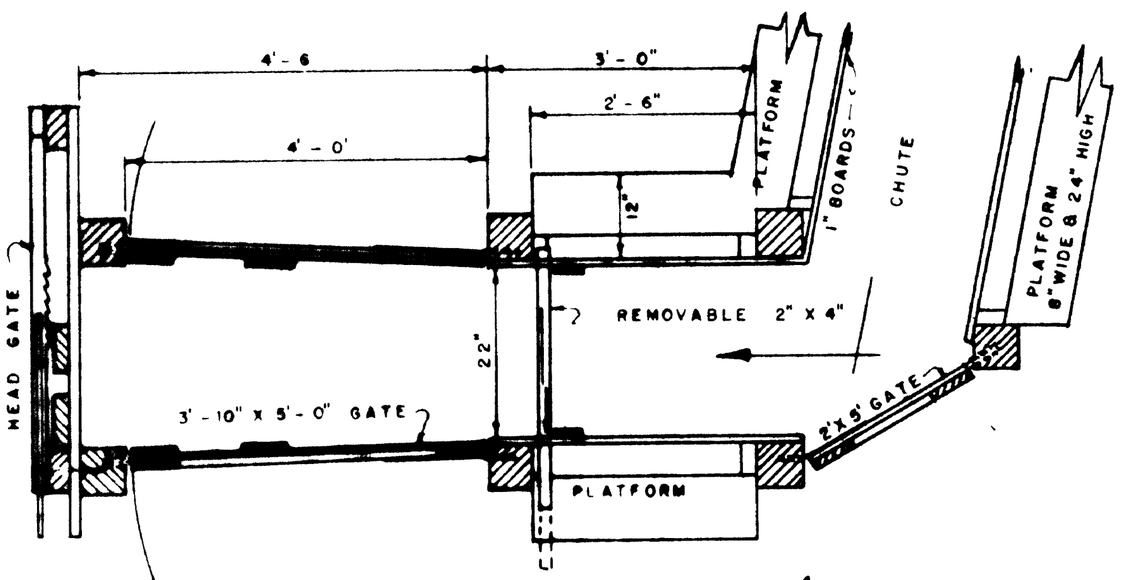

PLAN FOR HEAD GATE, EXIT GATE & CHUTE

COOPERATIVE EXTENSION WORK IN
AGRICULTURE AND HOME ECONOMICS
College of Agric. & Home Econ.
Univ of Ky Lexington
Agri Engr Division
AND
UNITED STATES DEPARTMENT OF AGRICULTURE COOPERATING

TWO-PEN CORRAL

VA '54 | EX 5796 | SHEET 3 OF 4

PLAN No

Revised 1972

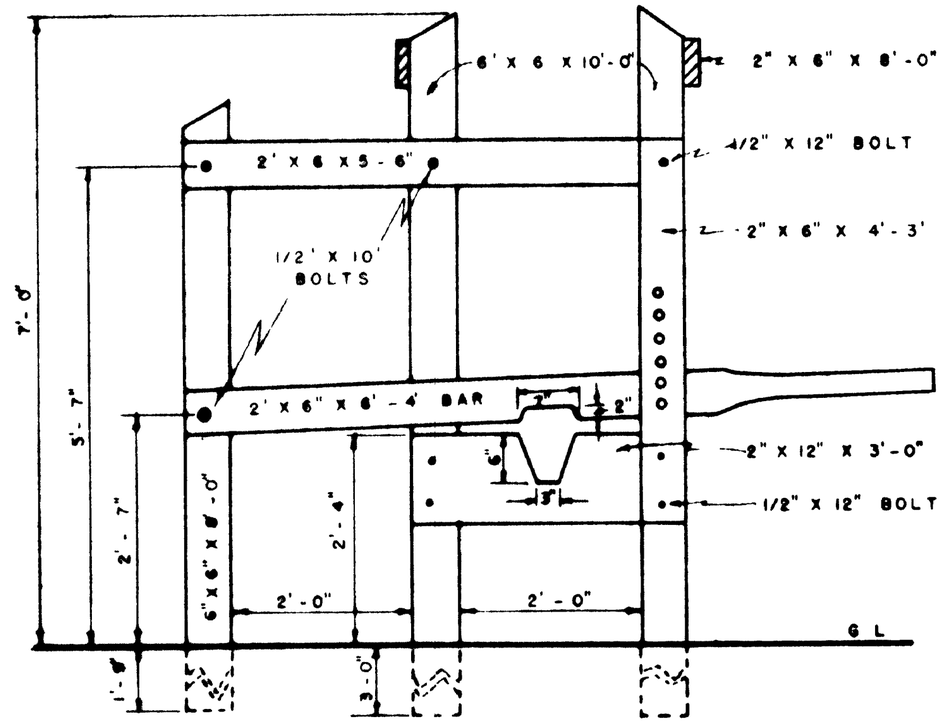

HEAD GATE NO 4

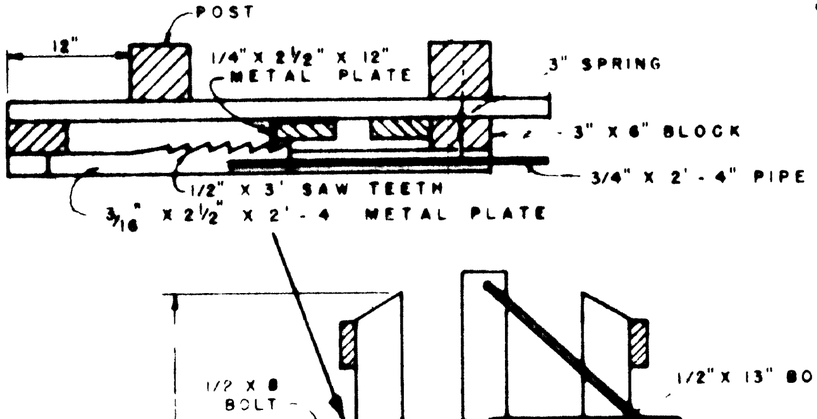

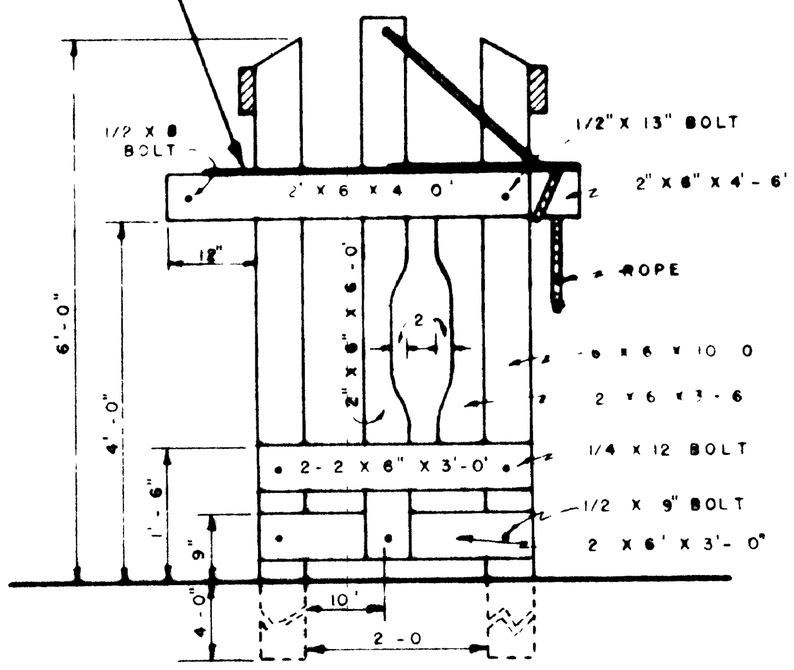

HEAD GATE NO 1

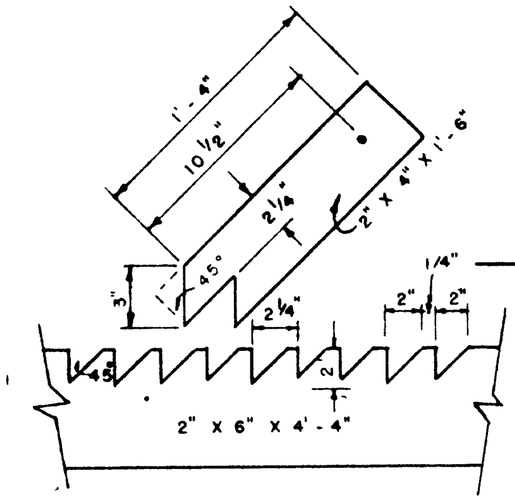

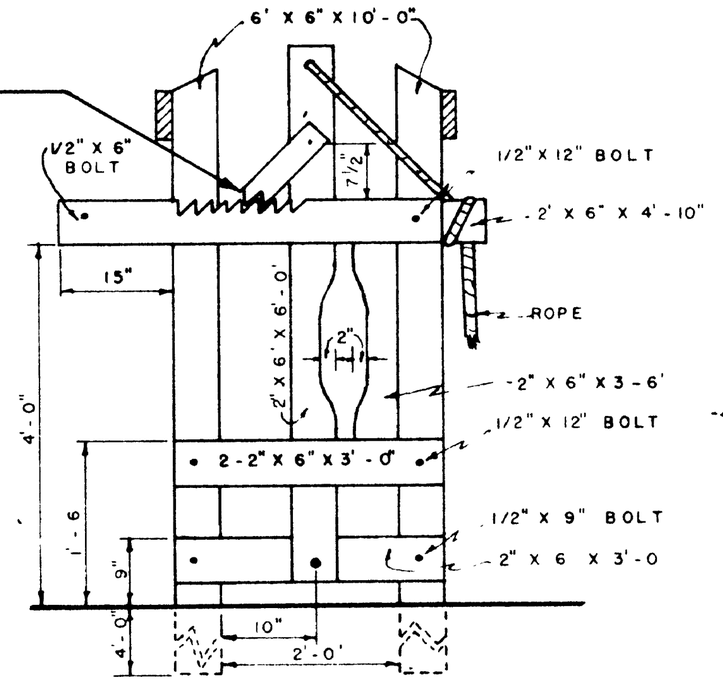

HEAD GATE NO 2

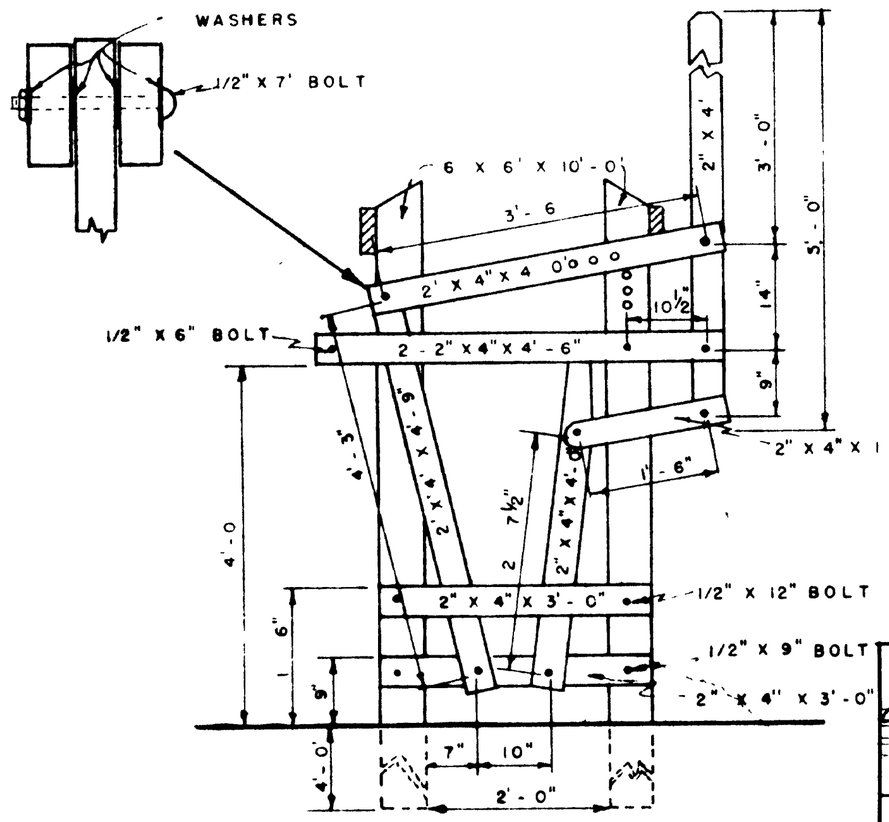

HEAD GATE NO. 3

COOPERATIVE EXTENSION WORK IN
AGRICULTURE AND HOME ECONOMICS
College of Agric. & Home Econ.
Univ of Kentucky Lexington
Agri. Engr. Division
AND
UNITED STATES DEPARTMENT OF AGRICULTURE COOPERATING

TWO-PEN CORRAL

VA '54	EX 5796	SHEET 4 OF 4

Revised 1972

PLAN No