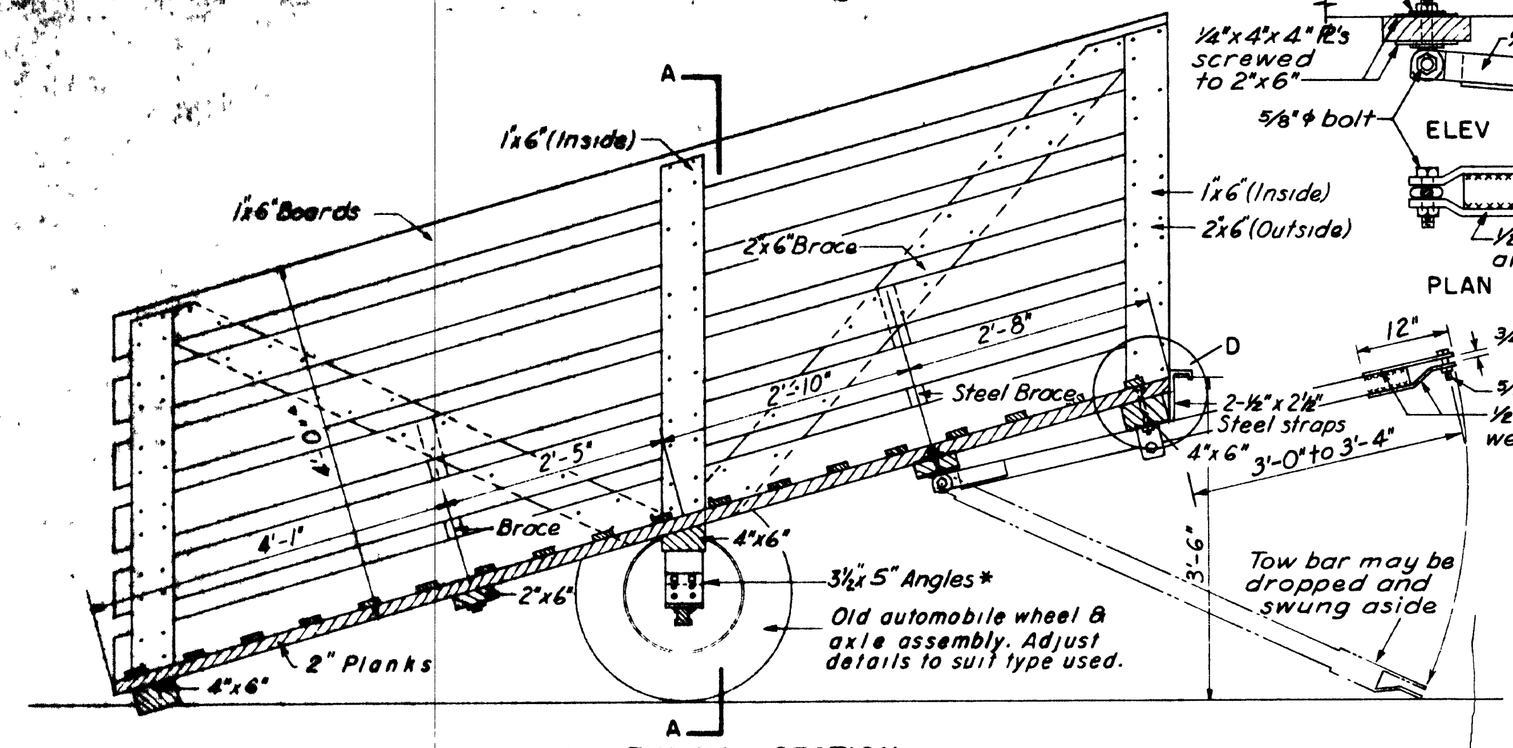

LONGITUDINAL SECTION

Scale-¾" = 1'-0"

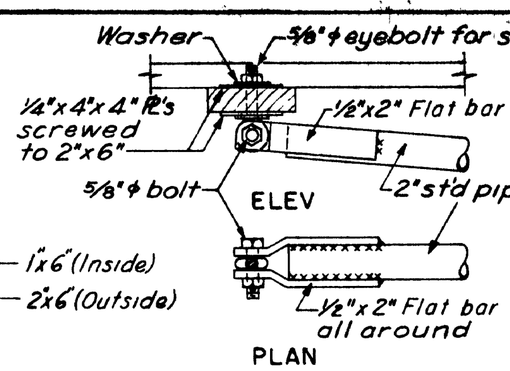

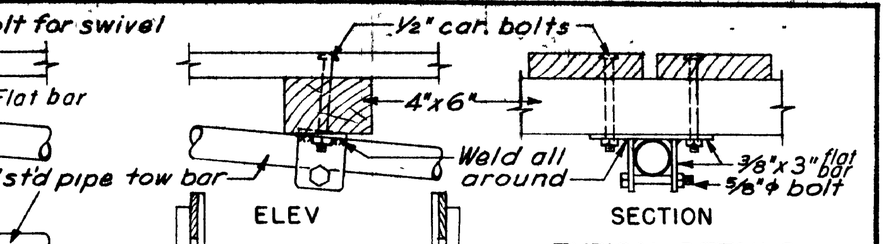

TYPICAL DETAILS
FOR TOWING HITCH
Hitch is optional, ϕ is not included in Bill of Materials
Scale · 1½" - 1'-0"

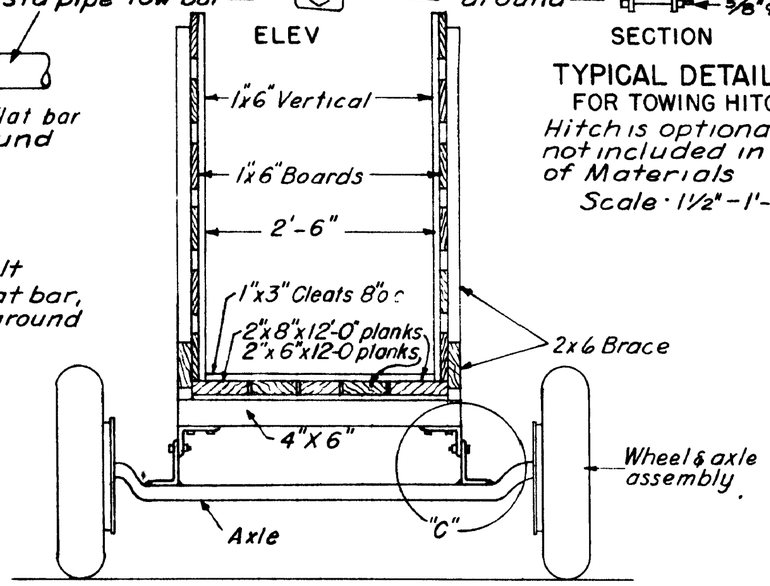

CROSS SECTION A-A

Scale-¾" = 1'-0"

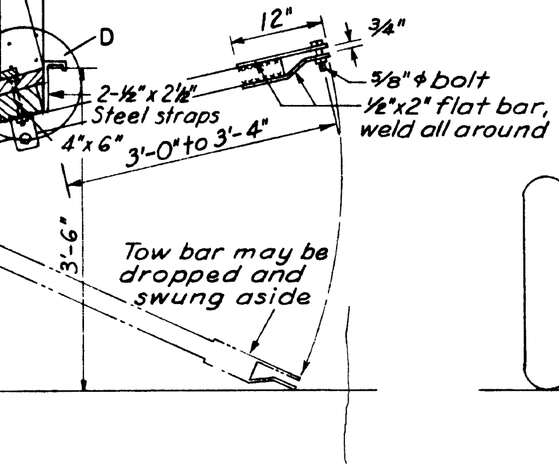

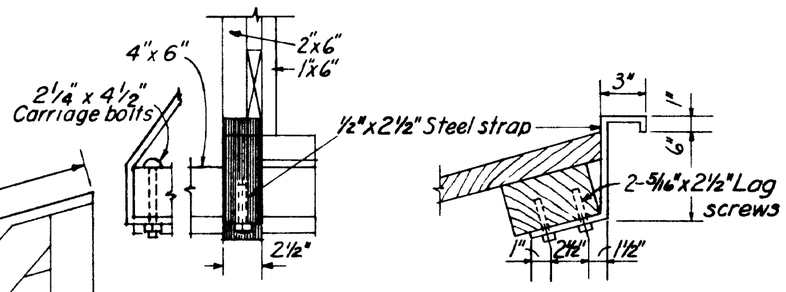

DETAIL AT D

Scale-1½" = 1'-0"

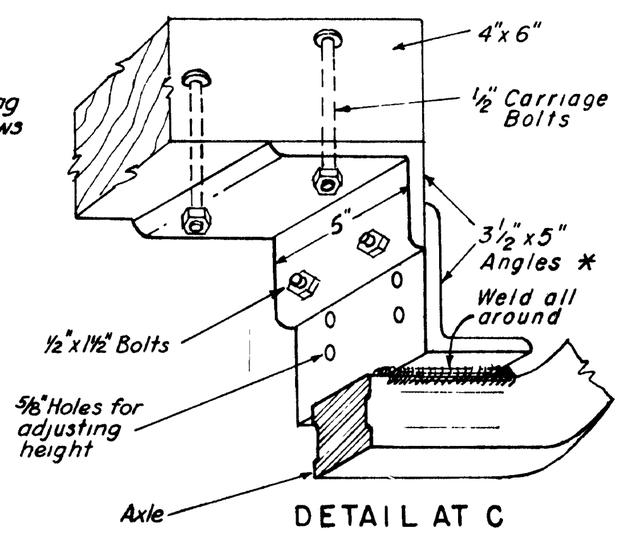

DETAIL AT C

** Note:- Size of angles will be governed by type of wheel and axle assembly used*

Lumber

1"x3"x8'-0"	- 6	pcs
1"x6"x8'-0"	- 3	"
1"x6"x12'-0"	- 12	"
2"x6"x10'-0"	- 1	"
2"x6"x12'-0"	- 5	"
2"x6"x14'-0"	- 2	"
2"x8"x12'-0"	- 2	"
4"x6"x14'-0"	- 1	"

Wheel and axle assembly - 1 ea
** Steel angle - 3½"x5"x5' - 4 ea*

Steel strap	⅜"x2"x2'-10"	- 4 ea.
	⅜"x2"x2'-0"	- 4 "
	½"x2½"x1'-4"	- 2 "
Carriage bolts	½"x4½"	- 12 "
Machine bolts	⅜"x3½"	- 16 "
" "	½"x1½"	- 4 "
" "	⅜"x3"	- 8 "
Lag screws	5/16"x2½"	- 4 "
Nails	6d	- 2½ lbs
"	10d	- 2½ "

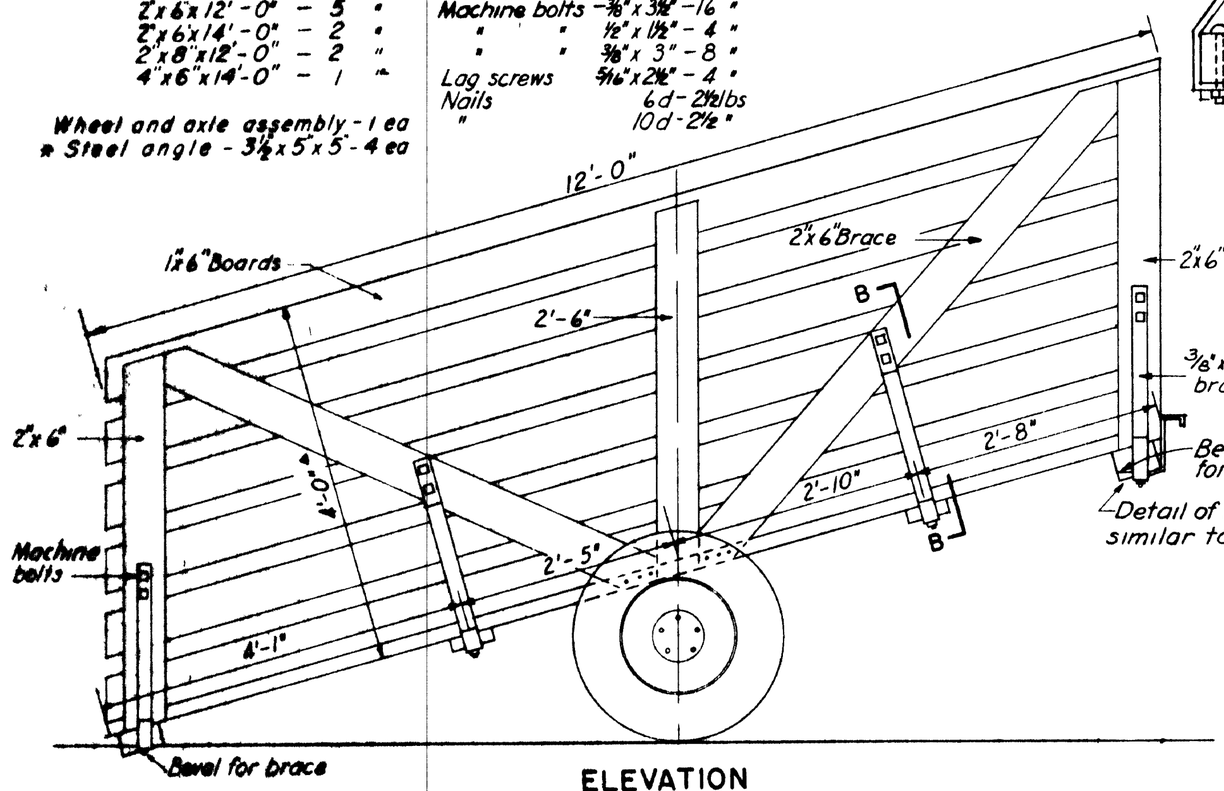

ELEVATION

Scale-¾" = 1'-0"

▲ NOTE: Increase to 5'-0" for range cattle.

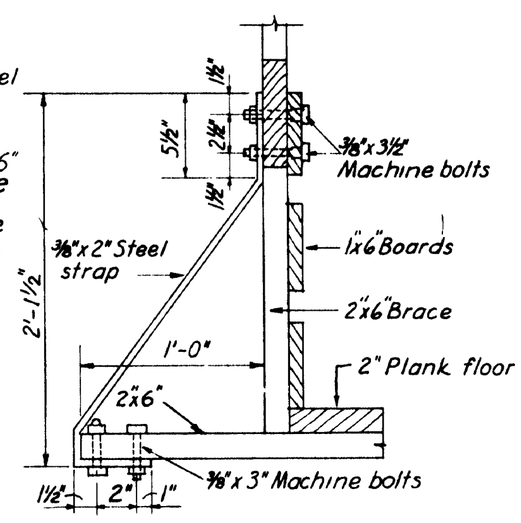

DETAIL AT B-B

Scale-1½" = 1'-0"

Revised 1955

COOPERATIVE EXTENSION WORK IN
AGRICULTURE AND HOME ECONOMICS
DEPARTMENT OF AGRICULTURAL ENGINEERING
COLLEGE OF AGRICULTURE
UNIVERSITY OF KENTUCKY
AND
UNITED STATES DEPARTMENT OF AGRICULTURE COOPERATING

MOVABLE CHUTE
FOR LOADING CATTLE

USDA '48	EX 5681	SHEET 1 OF 1

Revised 1953